SOLIDA

FASTENING SYSTEMS

PRODUCT CATALOGUE

CZECH MANUFACTURER OF FASTENING SYSTEMS

www.solidacz.com

SOLIDA
FASTENING SYSTEMS

Solida, spol. s r.o. is a Czech family manufacturing company, which was founded in May 1993.

The production program is mainly focused on complete system of fastening technology.

The production of installation sleeves, which is based on single and double screw sleeves, is the main supporting program.

The company has customers not only in the Czech Republic but also abroad.

Other standard products we manufacture include, among others, mounting beams, wall brackets, sleeves for air conditioning, stainless steel sleeves, solid sleeves, clamps, gas spacers, trapezoidal hangers, mounting angles, beam connectors and others.

Strojírenský zkušební ústav, s.p. (Engineering Test Institute, Public Enterprise)
Product Certification Body
Hudcova 424/56b, 621 00 Brno, Czech Republic

Issues

CERTIFICATE

Number: J-00851-20

Manufacturer: SOLIDA, spol. s r.o.
Semanínská 213
560 02 Česká Třebová, Czech Republic

Identification number: 49285271

Products: Fasteners and fastening systems for building distribution and technical equipment systems: clamps, cantilever arms, other parts and accessories

Product specifications: see annex (page 3 to page 5 of the certificate)

The Engineering Test Institute (SZU) hereby confirms that it conducted an initial type testing of the products specified above, with a positive result, in accordance with the provisions of Art. 8 (1) (a) of Government Regulation 163/2002 Coll., laying down technical requirements for selected construction products, as amended by Government Regulation 312/2005 Coll. and Government Regulation 215/2016 Coll., and that the products meet the requirements set forth in Construction Technical Certificate 202-STO-J-00874-20, dated 4 May 2020, valid until 3 May 2025.

Certification scheme applied: ČSN EN ISO/IEC 17067:2014, scheme 1a.

The present Certificate has been issued on the basis of Final Report 30-14904/JZ on Initial Type Testing dated 14 May 2020, issued by the Engineering Test Institute. The Final Report contains the conclusions from the findings, and the product identification data.

The Certificate expires on 3 May 2025 provided that its holder adheres to the rules for using the Certificate.

The present Certificate does not replace any document issued by an Authorized Body.

The rules for using the Certificate are specified overleaf.

In Brno, date: 15 May 2020

Ing. Pavel Šťcha
Head of Certification Body

J-00851-20 Page 1 (5)

www.szutest.cz

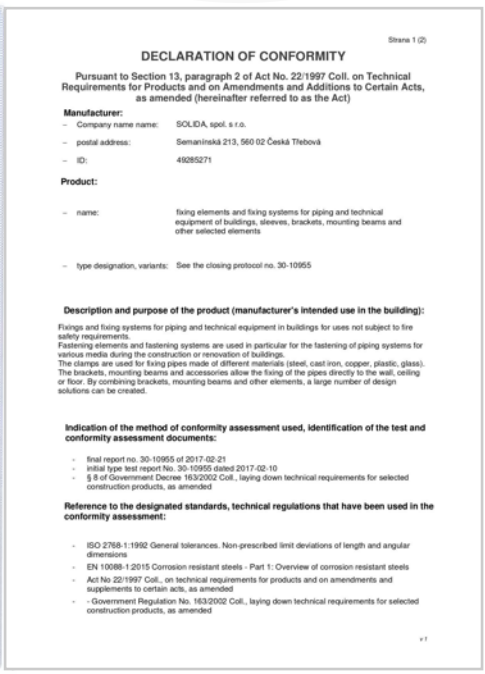

Strana 1 (2)

DECLARATION OF CONFORMITY

Pursuant to Section 13, paragraph 2 of Act No. 22/1997 Coll. on Technical Requirements for Products and on Amendments and Additions to Certain Acts, as amended (hereinafter referred to as the Act)

Manufacturer:

- Company name name: SOLIDA, spol. s r.o.
- postal address: Semanínská 213, 560 02 Česká Třebová
- ID: 49285271

Product:

- name: fixing elements and fixing systems for piping and technical equipment of buildings, sleeves, brackets, mounting beams and other selected elements
- type designation, variants: See the closing protocol no. 30-10955

Description and purpose of the product (manufacturer's intended use in the building):

Fixings and fixing systems for piping and technical equipment in buildings for uses not subject to fire safety requirements.
Fastening elements and fastening systems are used in particular for the fastening of piping systems for various media during the construction or renovation of buildings.
The clamps are used for fixing pipes made of different materials (steel, cast iron, copper, plastic, glass). The brackets, mounting beams and accessories allow the fixing of the pipes directly to the wall, ceiling or floor. By combining brackets, mounting beams and other elements, a large number of design solutions can be created.

Indication of the method of conformity assessment used, identification of the test and conformity assessment documents:

- final report no. 30-10955 of 2017-02-21
- initial type test report No. 30-10955 dated 2017-02-10
- § 8 of Government Decree 163/2002 Coll., laying down technical requirements for selected construction products, as amended

Reference to the designated standards, technical regulations that have been used in the conformity assessment:

- ISO 2768-1:1992 General tolerances. Non-prescribed limit deviations of length and angular dimensions
- EN 10088-1:2015 Corrosion resistant steels - Part 1: Overview of corrosion resistant steels
- Act No 22/1997 Coll., on technical requirements for products and on amendments and supplements to certain acts, as amended
- Government Regulation No. 163/2002 Coll., laying down technical requirements for selected construction products, as amended

PAVUS, a.s.

Order number:
514027 / Z220140066

SUITABILITY EVALUATION OF SUSPENSION SYSTEM BASED ON TEST RESULTS

for product

Fixing system for distribution of building services, water, heating, electro and air-conditioning

performed based on
Test report No. Pr-13-2.138 dated 2013-12-09

Sponsor: SOLIDA spol. s r.o.
Semanínská 213
560 20 Česká Třebová
Czech Republic

Test method:
ČSN EN 1363-1 » Fire resistance tests – Part 1: General requirements «

Document consists of 3 text pages.

Copies in total: 3
Copy number: 1

SOLIDA, spol. s r.o.

Semanínská 213

5602 Česká Třebová

ID: 49285271

VAT: CZ 49285271

Tel. +420 465 531 059
email: info@solida.cz

CONTACTS

COMPANY MANAGEMENT

Petr Kalousek - Chief Executive Officer	p.kalousek@solida.cz	+420 465 530 080
Petr Kalousek Jr. - production, technical support	kalousekjr@solida.cz	+420 736 128 895

BUSINESS DEPARTMENT

Bc. Jiří Mondek - Sales Manager	mondek@solida.cz	+420 605 565 994
Alena Cindrová - Orders, Invoicing	uctarna@solida.cz	+420 730 155 924
Jaroslav Landa - Technical Sales Representative	landa@solida.cz	+420 602 249 928
Pandelis Papadopulos - Technical Sales Representative	papadopulos@solida.cz	+420 777 990 560
Róbert Pavlík - Technical Sales Representative for Slovakia	robo.pavlik@solida.cz	+421 911 219 854

TECHNICAL DEPARTMENT	technik@solida.cz	+420 604 581 049
HEAD OF PRODUCTION - Stanislav Saňák	vyroba@solida.cz	+420 734 608 266
WAREHOUSE MANAGER - Dušan Valigurský	valigursky@solida.cz	+420 730 155 921

ORDERS	info@solida.cz	+420 730 155 924
	obchod@solida.cz	

SOLIDA
FASTENING SYSTEMS

TABLE OF CONENTS

RUBBER LINED PIPE CLAMPS..... pp. 1 - 5

UNLINED PIPE CLAMPS AND UBOLTS..... pp. 6 - 9

PIPE CLAMPS FOR INSULATED PIPING..... pp. 10 - 12

PLASTIC BRACKETS..... pp. 13 - 14

VENTILATION FASTENING..... pp. 15 - 16

MOUNTING SYSTEM..... pp. 18 - 30

FASTENING ACCESSORIES..... pp. 32 - 46

FASTENING..... pp. 47 - 57

STAINLESS STEEL PRODUCTS..... pp. 59 - 69

FLOOR PIPE FASTENING..... pp. 71 - 72

FIRE PROTECTION SYSTEMS ..... pp. 73 - 74

ROOF DRAINAGE SYSTEM..... p. 75

FASTENING FOR ELECTRONICS..... p. 76

FIXING POINTS & SLIDING SUPPORTS..... pp. 77 - 78

HEAVY DUTY "ON" FASTENING..... pp. 79 - 85

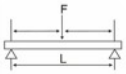
DIMENSIONS AND LOAD CAPACITY..... pp. 87 - 96

SOLIDA

FASTENING SYSTEMS

RUBBER LINED PIPE CLAMPS

pp: 1. - 5.

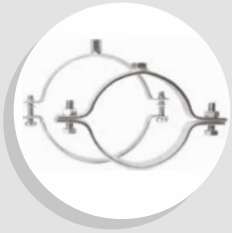

UNLINED PIPE CLAMPS AND UBOLTS

pp: 6. - 9.

PIPE CLAMPS FOR INSULATED PIPING

pp: 10. - 12.

PLASTIC BRACKETS

pp: 13. - 14.

VENTILATION FASTENING

pp: 15. - 16.

CZECH MANUFACTURER OF FASTENING SYSTEMS

www.solidacz.com

ONE-SCREW PIPE CLAMP

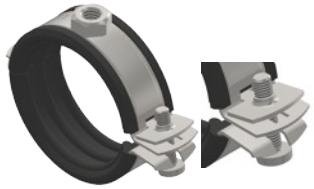

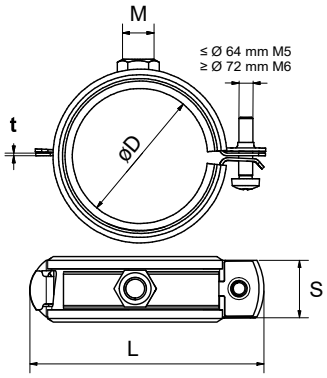

- ☑ with quickclosing system
- ☑ material: steel
- ☑ galvanized
- ☑ damping insert: EPDM

Ord. code	Ø D (mm)	Inch	M	L (mm)	S x t (mm)	Fa,z (N)	Package in pcs
311001216	12 - 16	1/4"	M8	48	20 x 1,25	800	100
311001719	17 - 19	3/8"	M8	51	20 x 1,25	800	100
311002023	20 - 23	1/2"	M8	57	20 x 1,25	800	100
311002530	25 - 30	3/4"	M8	63	20 x 1,25	800	100
311003138	31 - 38	1"	M8	71	20 x 1,25	800	100
311004046	40 - 46	5/4"	M8	80	20 x 1,25	800	100
311004853	48 - 53	6/4"	M8	88	20 x 1,25	800	50
311005458	54 - 59		M8	94	20 x 1,25	800	50
311006064	60 - 64	2"	M8	100	20 x 1,25	800	50
311007278	72 - 78	2 1/2"	M8/M10	114	25 x 1,5	800	50
311008792	87 - 92	3"	M8/M10	128	25 x 1,5	800	50
311102116	108-116	4"	M8/M10	153	25 x 2	800	50
3X1001216	12 - 16	1/4"	M8/M10	48	20 x 1,25	800	100
3X1001719	17 - 19	3/8"	M8/M10	51	20 x 1,25	800	100
3X1002023	20 - 23	1/2"	M8/M10	57	20 x 1,25	800	100
3X1002530	25 - 30	3/4"	M8/M10	63	20 x 1,25	800	100
3X1003138	31 - 38	1"	M8/M10	71	20 x 1,25	800	100
3X1004046	40 - 46	5/4"	M8/M10	80	20 x 1,25	800	100
3X1004853	48 - 53	6/4"	M8/M10	88	20 x 1,25	800	50
3X1005459	54 - 59		M8/M10	94	20 x 1,25	800	50
3X1006064	60 - 64	2"	M8/M10	100	20 x 1,25	800	50

TWO-SCREW PIPE CLAMP

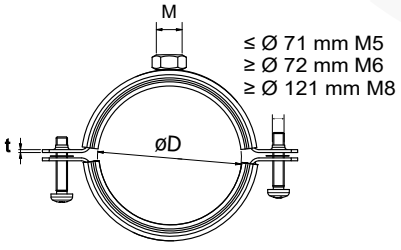

- ☑ material: steel
- ☑ galvanized
- ☑ damping insert: EPDM

Ord. code	Ø D (mm)	Inch	M	L (mm)	S x t (mm)	Fa,z (N)	Package in pcs
312001216	12 - 16	1/4"	M8	56	20 x 1,25	800	100
312001719	17 - 19	3/8"	M8	59	20 x 1,25	800	100
312002023	20 - 23	1/2"	M8	62	20 x 1,25	800	100
312002530	25 - 30	3/4"	M8	68	20 x 1,25	800	100
312003138	31 - 38	1"	M8	78	20 x 1,25	800	100
312004046	40 - 46	5/4"	M8	88	20 x 1,25	800	100
312004853	48 - 53	6/4"	M8	96	20 x 1,25	800	50
312005459	54 - 59		M8/M10	101	20 x 1,25	800	50
312006064	60 - 64	2"	M8/M10	111	20 x 1,25	800	50
312006771	67 - 71		M8/M10	116	20 x 1,25	800	50
312007278	72 - 78	2 1/2"	M8/M10	127	25 x 1,5	2500	50
312008186	81 - 86		M8/M10	138	25 x 1,5	2500	50
312008792	87 - 92	3"	M8/M10	145	25 x 1,5	2500	50
312095103	95 - 103		M8/M10	156	25 x 1,5	2500	50
312102116	102 - 116	4"	M8/M10	170	25 x 2	2500	50
312121127	121 - 127		M8/M10	185	25 x 2,5	3000	25
312133141	133 - 141	5"	M8/M10	201	25 x 2,5	3000	25
312159168	159 - 168	6"	M8/M10	230	25 x 2,5	3000	25
312167170	164 - 170		M8/M10	245	25 x 2,5	3000	12
312182188	182 - 188		M8/M10	268	25 x 2,5	3000	12
312193203	193 - 203		M8/M10	275	25 x 2,5	3000	12
312200210	204 - 210	8"	M8/M10	283	25 x 2,5	3000	12
312210219	210 - 219	8"	M8/M10	283	25 x 2,5	3000	12
3Y2001216	12 - 16	1/4"	M8/M10	56	20 x 1,25	800	100
3Y2001719	17 - 19	3/8"	M8/M10	59	20 x 1,25	800	100
3Y2002023	20 - 23	1/2"	M8/M10	62	20 x 1,25	800	100
3Y2002530	25 - 30	3/4"	M8/M10	68	20 x 1,25	800	100
3Y2003138	31 - 38	1"	M8/M10	78	20 x 1,25	800	100
3Y2004046	40 - 46	5/4"	M8/M10	88	20 x 1,25	800	100
3Y2004853	48 - 53	6/4"	M8/M10	96	20 x 1,25	800	50

info@solida.cz +420 465 531 059 www.solidacz.com

RUBBER LINED TWO-SCREW CLIP PIPE CLAMP

Ord. code	Ø D (mm)	Inch	M	L (mm)	S x t (mm)	Fa,z (N)	Package in pcs
312220016	12 - 16	1/4"	M8	56	20 x 1,25	800	100
312220018	17 - 19	3/8"	M8	59	20 x 1,25	800	100
312220020	20 - 23	1/2"	M8	62	20 x 1,25	800	100
312220025	25 - 30	3/4"	M8	68	20 x 1,25	800	100
312220032	31 - 38	1"	M8	78	20 x 1,25	800	100
312220040	40 - 46	5/4"	M8	88	20 x 1,25	800	100
312220050	48 - 53	6/4"	M8	96	20 x 1,25	800	50
312220059	54 - 59		M8/M10	101	20 x 1,25	800	50
312220064	60 - 64	2"	M8/M10	111	20 x 1,25	800	50
312220078	72 - 78	2 1/2"	M8/M10	127	25 x 1,5	2500	50
312220087	87 - 92	3"	M8/M10	145	25 x 1,5	2500	50
312220116	102 - 116	4"	M8/M10	170	25 x 2,0	2500	50
312221016	12 - 16	1/4"	M8/M10	56	20 x 1,25	800	100
312221018	17 - 19	3/8"	M8/M10	59	20 x 1,25	800	100
312221020	20 - 23	1/2"	M8/M10	62	20 x 1,25	800	100
312221025	25 - 30	3/4"	M8/M10	68	20 x 1,25	800	100
312221032	31 - 38	1"	M8/M10	78	20 x 1,25	800	100
312221040	40 - 46	5/4"	M8/M10	88	20 x 1,25	800	100
312221050	48 - 53	6/4"	M8/M10	96	20 x 1,25	800	50

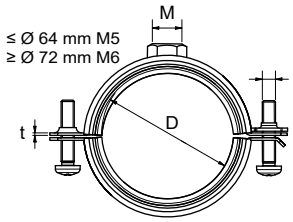

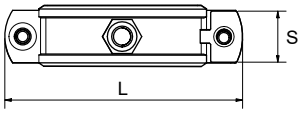

- ☑ with quickclosing system
- ☑ material: steel
- ☑ galvanized
- ☑ damping insert: EPDM

RUBBER LINED ONE-SCREW AND TWO-SCREW SLIDING PIPE CLAMP

Ord. code	Ø D (mm)	M	L (mm)	S x t (mm)	Fa,z (N)	Package in pcs
	ONE-SCREW					
313001719	17 - 19	M8	51	20 x 1,25	800	100
313002023	20 - 23	M8	57	20 x 1,25	800	100
313002530	25 - 30	M8	63	20 x 1,25	800	100
313003138	31 - 38	M8	71	20 x 1,25	800	100
313004046	40 - 46	M8	80	20 x 1,25	800	100
313004853	48 - 53	M8	88	20 x 1,25	800	50
	TWO-SCREW					
313005459	54 - 59	M8/M10	101	20 x 1,25	800	50
313006064	60 - 64	M8/M10	111	20 x 1,25	800	50
313006771	67 - 71	M8/M10	116	20 x 1,25	800	50
313007278	72 - 78	M8/M10	127	20 x 1,5	2500	50
313008186	81 - 86	M8/M10	138	20 x 1,5	2500	50
313008792	87 - 92	M8/M10	145	20 x 1,5	2500	50
313101106	110	M8/M10	170	20 x 2,0	2500	50
313101125	125	M8/M10	185	20 x 2,0	3000	25
313101150	150	M8/M10	215	20 x 2,0	3000	25
313101160	160	M8/M10	230	20 x 2,0	3000	25
313101200	200	M8/M10	275	20 x 2,0	3000	12

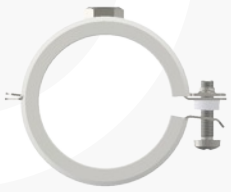

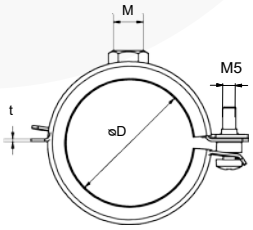

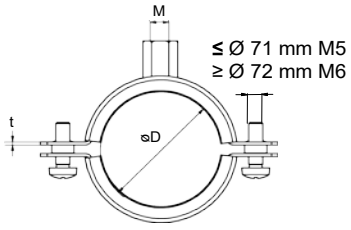

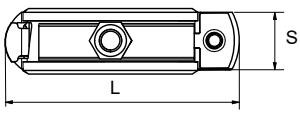

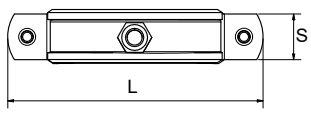

- ☑ material: steel
- ☑ galvanized
- ☑ damping insert: EPDM
- ☑ designed for plastic pipe distribution

TWO-SCREW PIPE CLAMP FOR HIGH TEMPERATURE

Ord. Code	Ø D (mm)	Inch	M	L (mm)	S x t (mm)	Fa,z (N)	Package in pcs
312401216	12 - 16	1/4"	M8	56	20 x 1,25	800	100
312401719	17 - 19	3/8"	M8	59	20 x 1,25	800	100
312402023	20 - 23	1/2"	M8	62	20 x 1,25	800	100
312402530	25 - 30	3/4"	M8	68	20 x 1,25	800	100
312403138	31 - 38	1"	M8	78	20 x 1,25	800	100
312404046	40 - 46	5/4"	M8	88	20 x 1,25	800	100
312404853	48 - 53	6/4"	M8	96	20 x 1,25	800	50
312405459	54 - 59		M8/M10	101	20 x 1,25	800	50
312406064	60 - 64	2"	M8/M10	111	20 x 1,25	800	50
312406771	67 - 71		M8/M10	116	20 x 1,25	800	50
312407278	72 - 78	2 1/2"	M8/M10	127	25 x 1,5	2500	50
312408186	81 - 86		M8/M10	138	25 x 1,5	2500	50
312408792	87 - 92	3"	M8/M10	145	25 x 1,5	2500	50
312495103	95 - 103		M8/M10	156	25 x 1,5	2500	50
312402116	102 - 116	4"	M8/M10	170	25 x 2,0	2500	50
312421127	121 - 127		M8/M10	185	25 x 2,5	3000	25
312433141	133 - 141	5"	M8/M10	201	25 x 2,5	3000	25
312459168	159 - 168	6"	M8/M10	230	25 x 2,5	3000	25
312400210	204 - 210	8"	M8/M10	283	25 x 2,5	3000	12

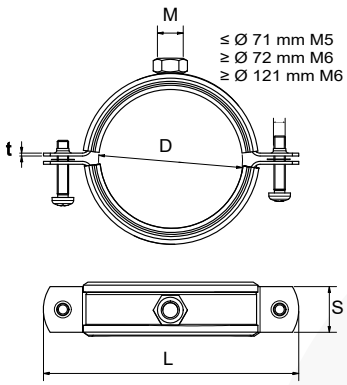

- ☑ material: steel
- ☑ galvanized
- ☑ heat and sound insulation insert: silicone
- ☑ temperature range: -50 °C to +220 °C

DOUBLE PIPE CLAMP WITH WOOD SCREW

Ord. Code	Ø D (mm)	La (mm)	L (mm)	Screw	S x t (mm)	Package in pcs
314800010	2 × 10	38	80	8	20×1,25	50
314800012	2 × 12	40	80	8	20×1,25	50
314800015	2 × 15	46	80	8	20×1,25	50
314800018	2 × 18	48	100	8	20×1,25	50
314800022	2 × 22	50	100	8	20×1,25	50
314800028	2 × 28	56	100	8	20×1,25	50
314800035	2 × 35	64	100	8	20×1,25	50

La

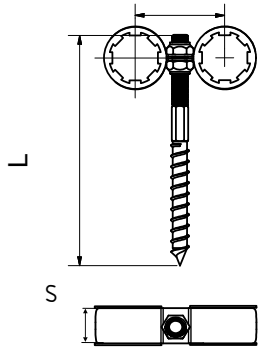

Double sleeves are mainly used to fix two parallel pipes of the same diameter.The installation of these double sleeves can be used as a solution for all heating, water, gas.

- ☑ material: steel
- ☑ galvanized
- ☑ soundproofing insert: PVC

info@solida.cz +420 465 531 059 www.solidacz.com

PIPE CLAMP SOLID M12/M16

Ord. Code	Ø D (mm)	M	L (mm)	S x t (mm)	Fa,z (N)	Package in pcs
317104046	40 - 46	M12/M16	131	40x4	9500	1
317104853	48 - 53	M12/M16	138	40x4	9500	1
317106064	60 - 64	M12/M16	149	40x4	9500	1
317106771	67 - 71	M12/M16	157	40×4	9500	1
317108090	72 - 78	M12/M16	165	40x4	9500	1
317108104	87 - 92	M12/M16	170	40x4	9500	1
317108118	108 - 118	M12/M16	210	40x4	9500	1
317108125	125 - 130	M12/M16	227	40×4	9500	1
317133137	133 - 137	M12/M16	228	40×4	9500	1
317138144	138 - 144	M12/M16	245	40×4	9500	1
317159165	159 - 165	M12/M16	260	40×4	9500	1
317164170	164 - 170	M12/M16	272	40×4	9500	1
317164185	182 - 188	M12/M16	275	40×4	9500	1
317193203	193 - 203	M12/M16	300	40×4	9500	1
317208214	208 - 214	M12/M16	300	40×4	9500	1
317217224	217 - 224	M12/M16	310	40×4	9500	1
317244254	244 - 254	M12/M16	345	40×4	9500	1
317267277	267 - 277	M12/M16	365	40×4	9500	1
317278282	278 - 282	M12/M16	380	40×4	9500	1
317313318	313 - 318	M12/M16	405	40×4	9500	1
317320326	320 - 326	M12/M16	415	40×4	9500	1
317353360	353 - 360	M12/M16	455	40×4	9500	1

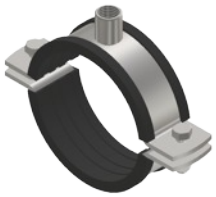

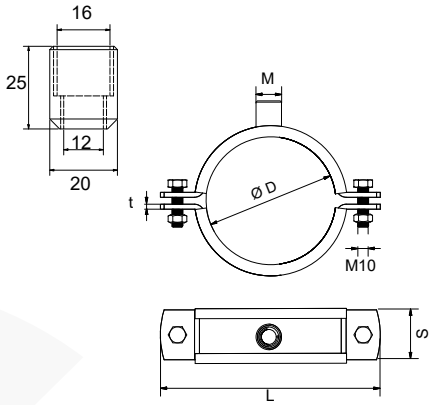

- ☑ material: steel
- ☑ galvanized
- ☑ soundproofing insert: EPDM
- ☑ can be produced in 1" version according to customer's request

PIPE CLAMP SOLID M12

Ord. Code	Ø D (mm)	M	L (mm)	S x t (mm)	Fa,z (N)	Package in pcs
317901046	40 - 46	1/2"	131	40x4	9500	1
317901053	48 - 53	1/2"	138	40x4	9500	1
317901064	60 - 64	1/2"	149	40x4	9500	1
317901078	72 - 78	1/2"	165	40x4	9500	1
317901092	87 - 92	1/2"	170	40x4	9500	1
317901118	108 - 118	1/2"	210	40x4	9500	1
317901130	125 - 130	1/2"	227	40×4	9500	1
317901137	133 - 137	1/2"	228	40×4	9500	1
317901144	138 - 144	1/2"	245	40×4	9500	1
317901165	159 - 165	1/2"	260	40×4	9500	1
317901170	164 - 170	1/2"	272	40×4	9500	1
317901188	182 - 188	1/2"	275	40×4	9500	1
317901203	193 - 203	1/2"	300	40×4	9500	1
317901214	208 - 214	1/2"	300	40×4	9500	1
317901224	217 - 224	1/2"	310	40×4	9500	1
317901254	244 - 254	1/2"	345	40×4	9500	1
317901277	267 - 277	1/2"	365	40×4	9500	1
317901282	278 - 282	1/2"	380	40×4	9500	1
317901318	313 - 318	1/2"	405	40×4	9500	1
317901326	320 - 326	1/2"	415	40×4	9500	1
317901360	353 - 360	1/2"	455	40x4	9500	1

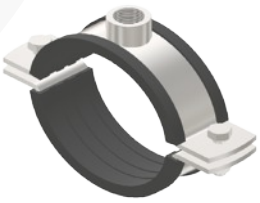

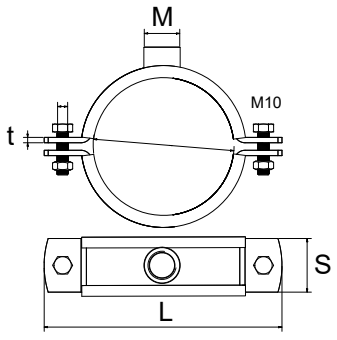

- ☑ material: steel
- ☑ galvanized
- ☑ can be produced in 1" version according to customer's request

PIPE CLAMPS FOR PLASTIC PIPES

Pipe Clamp PB

Ord. Code	Ø D (mm)	M	L (mm)	S x t (mm)	Package in pcs
Pipe Clamp PB solid					
313101075	75	without nut	116	20x1,25	1
313101090	90	without nut	145	20x2	1
313101110	110	without nut	170	20x2	1
313101125	125	without nut	185	20x2	1
Pipe Clamp Solid Distance					
317108075	78	M12/M16	165	40x4	1
317108091	90	M12/M16	170	40x4	1
317108110	110	M12/M16	210	40x4	1
317108125	125	M12/M16	227	40x4	1

Pipe Clamp Solid Distance

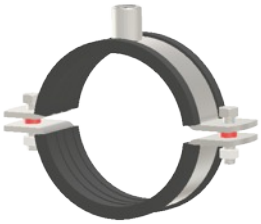

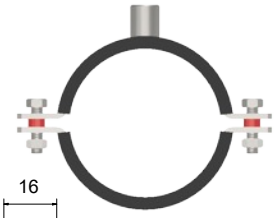

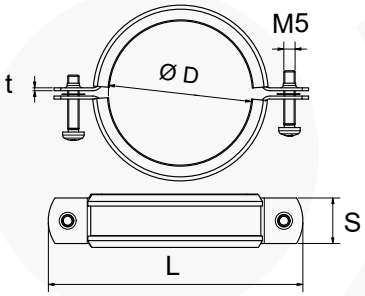

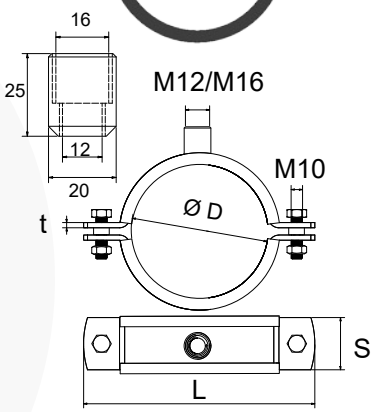

- ☑ material: steel
- ☑ galvanized
- ☑ soundproofing insert: EPDM

RUBBER PROFILE

Ord. Code	A (mm)	B (mm)	C (mm)	Usage	Package in (m)
340102006	6	1,5	20	clamps from 12 – 16 to 67 – 71 mm	30
340102506	6	2,5	25	clamps from 72 – 78 to 210 – 219 mm	30
340104004	4	4	40	clamps SOLID	30
340104005			38	fixing rail 38/40	25
340104006			28	fixing rail 27/18 – 28/30 mm	25
340104007			40	fixing rail 41/21, 41/41, 41/62	25

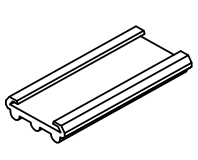

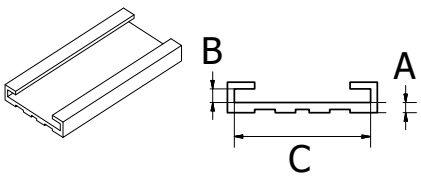

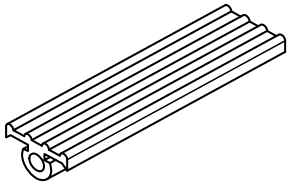

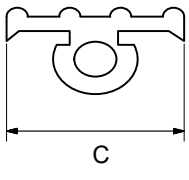

- ☑ material: rubber profile EPDM
- ☑ temperature range: -40 °C to +110 °C

info@solida.cz +420 465 531 059 www.solidacz.com

TWO-SCREW PIPE CLAMP

Ord. Code	Ø D (mm)	M	L (mm)	S x t (mm)	Fa,z (N)	Package in pcs
314001216	22 - 28*	M8	56	20 x 1,25	800	100
314001719	29 - 31*	M8	59	20 x 1,25	800	100
314002023	32 - 35*	M8	62	20 x 1,25	800	100
314002530	37 - 42*	M8	68	20 x 1,25	800	100
314003138	43 - 50*	M8	78	20 x 1,25	800	100
314004046	52 - 58*	M8	88	20 x 1,25	800	100
314004853	60 - 65*	M8	96	20 x 1,25	800	50
314005459	66 - 71*	M8/M10	101	20 x 1,25	800	50
314006064	72 - 76*	M8/M10	111	20 x 1,5	2500	50
314006771	79 - 83*	M8/M10	116	20 x 1,5	2500	50
314007278	84 - 90*	M8/M10	127	25 x 1,5	2500	50
314008186	93 - 98*	M8/M10	138	25 x 1,5	2500	50
314008792	99 - 104*	M8/M10	145	25 x 1,5	2500	50
331495103	110 - 118*	M8/M10	156	25 x 1,5	2500	50
314102116	114 - 128*	M8/M10	170	25 x 2	3000	50
314121127	131 - 137*	M8/M10	185	25 x 2,5	3000	50
314133141	143 - 151*	M8/M10	201	25 x 2,5	3000	25
314159168	169 - 178*	M8/M10	230	25 x 2,5	3000	25
314210219	220 - 229*	M8/M10	283	25 x 2,5	3000	12

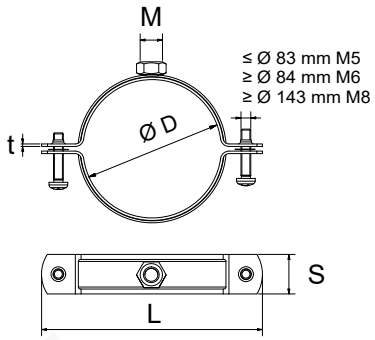

- ☑ material: steel
- ☑ galvanized

*** Dimensions are stamped on the pipe clamp, which are valid for the size of the sleeve**

TWO-SCREW PIPE CLAMP SOLID M12/M16

Ord. Code	Ø D (mm)	M	L (mm)	S x t (mm)	Fa,z (N)	Package in pcs
317408046	40 - 46	M12/M16	131	40x4	9500	1
317408053	48 - 53	M12/M16	138	40x4	9500	1
317408064	60 - 64	M12/M16	149	40x4	9500	1
317408090	72 - 78	M12/M16	165	40x4	9500	1
317408098	87 - 92	M12/M16	170	40x4	9500	1
317408104	108 - 118	M12/M16	210	40x4	9500	1
317408125	125 - 130	M12/M16	227	40×4	9500	1
317408118	133 - 137	M12/M16	228	40×4	9500	1
317433137	138 - 144	M12/M16	245	40×4	9500	1
317438144	159 - 165	M12/M16	260	40×4	9500	1
317459165	164 - 170	M12/M16	272	40×4	9500	1
317464170	182 - 188	M12/M16	275	40×4	9500	1
317493203	193 - 203	M12/M16	300	40×4	9500	1
317508214	208 - 214	M12/M16	300	40×4	9500	1
317517524	217 - 224	M12/M16	310	40×4	9500	1
317544254	244 - 254	M12/M16	345	40×4	9500	1
317567277	267 - 277	M12/M16	365	40×4	9500	1
317578282	278 - 282	M12/M16	380	40×4	9500	1
317613318	313 - 318	M12/M16	395	40×4	9500	1
317613326	320 - 326	M12/M16	410	40×4	9500	1
317613360	353 - 360	M12/M16	435	40x4	9500	1

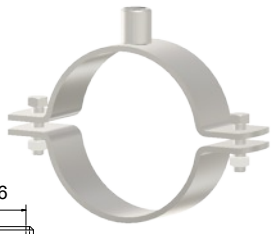

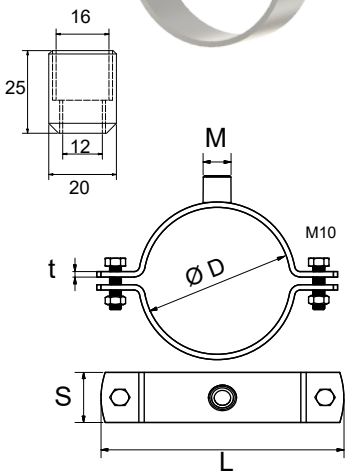

- ☑ material: steel
- ☑ galvanized
- ☑ can be produced in 1" version according to customer's request

PIPE CLAMP SOLID 1/2“

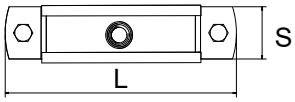

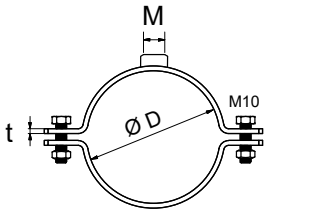

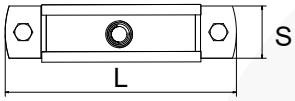

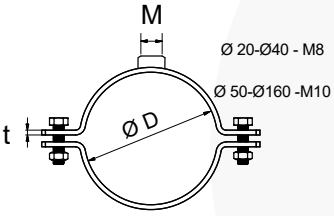

- ☑ material: steel
- ☑ galvanized
- ☑ can be produced in 1" version according to customer's request

Ord. Code	Ø D (mm)	M	L (mm)	S x t (mm)	Fa,z (N)	Package in pcs
317902046	40 - 46	1/2"	131	40x4	9500	1
317902053	48 - 53	1/2"	138	40x4	9500	1
317902064	60 - 64	1/2"	149	40x4	9500	1
317902078	72 - 78	1/2"	165	40x4	9500	1
317902092	87 - 92	1/2"	170	40x4	9500	1
317902118	108 - 118	1/2"	210	40x4	9500	1
317902130	125 - 130	1/2"	227	40x4	9500	1
317902137	133 - 137	1/2"	228	40x4	9500	1
317902144	138 - 144	1/2"	245	40x4	9500	1
317902165	159 - 165	1/2"	260	40x4	9500	1
317902170	164 - 170	1/2"	272	40x4	9500	1
317902188	182 - 188	1/2"	275	40x4	9500	1
317902203	193 - 203	1/2"	300	40x4	9500	1
317902214	208 - 214	1/2"	300	40x4	9500	1
317902224	217 - 224	1/2"	310	40x4	9500	1
317902254	244 - 254	1/2"	345	40x4	9500	1
317902277	267 - 277	1/2"	365	40x4	9500	1
317902282	278 - 282	1/2"	380	40x4	9500	1
317902318	313 - 318	1/2"	395	40x4	9500	1
317902326	320 - 326	1/2"	410	40×4	9500	1
317602360	353 - 360	1/2"	435	40x4	9500	1
Pipe Clamp Solida for plastic pipes						
317903020	20	1/2"	70	25x2,5	2000	1
317903025	25	1/2"	76	25x2,5	2000	1
317903032	32	1/2"	84	25x2,5	2000	1
317903040	40	1/2"	96	25x2,5	2000	1
317903050	50	1/2"	138	30x3	5000	1
317903060	63	1/2"	149	30x3	5000	1
317903075	75	1/2"	165	30x3	5000	1
317903090	90	1/2"	170	30x3	5000	1
317903110	110	1/2"	210	30x3	5000	1
317903125	125	1/2"	227	30x3	5000	1
317903140	140	1/2"	245	30x3	5000	1
317903160	160	1/2"	260	30x3	5000	1

SINGLE-SIDED, DOUBLE-SIDED CLAMP

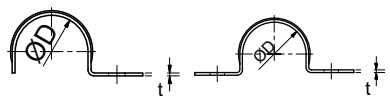

- ☑ material: steel
- ☑ galvanized

Ord. Code	Ø D (mm)	S x t (mm)	Package in pcs
One-sided			
319401010	10	14x1	200
319401013	13	14x1	200
319401016	16	14x1	100
319401019	19	14x1	100
319401022	22	14x1	100
319401026	26	14x1	100
319401028	28	14x1	100
319401032	32	14x1	100
319401038	38	14x1	100
319401050	50	14x1	50

Ord. Code	Ø D (mm)	S x t (mm)	Package in pcs
Two-sided			
319403010	10	14x1	200
319403013	13	14x1	200
319403016	16	14x1	100
319403019	19	14x1	100
319403022	22	14x1	100
319403026	26	14x1	100
319403028	28	14x1	100
319403032	32	14x1	100
319403038	38	14x1	100
319403050	50	14x1	50

info@solida.cz +420 465 531 059 www.solidacz.com

U-BOLT FROM ROUND STEEL

Ord. Code	Ø D (mm)	Inch	M	L1 (mm)	La (mm)	Package in pcs
322410003	18	3/8"	M6	24	40	1
322410004	22	1/2"	M6	27	44	1
322410005	28	3/4"	M6	35	50	1
322410006	36	1"	M6	40	57	1
322410007	43	5/4"	M6	48	66	1
322410008	49	6/4"	M6	57	81	1
322410009	63	2"	M8	71	95	1
322410011	77	2 1/2"	M8	85	111	1
322410012	91	3"	M8	101	125	1
322410014	115	4"	M8	121	145	1
322410016	137	5"	M8	145	170	1
322410017	160	6"	M8	168	210	1
322408020	8 - 13	1/4"	M6			1
322408025	12 - 17	3/8"	M6	23	35	1
322408030	15 - 21	1/2"	M6	27	44	1
322408035	20–27	3/4"	M8	35	58	1
322408042	26–34	1"	M8	42	65	1
322408056	33–42	5/4"	M8	51	73	1
322408057	40–49	6/4"	M8	55	80	1
322408071	50–60	2"	M8	70	95	1
322408084	60–70	2 1/4"	M10	75	108	1
322408090	66–76	2 1/2"	M10	84	120	1
322408093	70–82	2 3/4"	M10	90	125	1
322408100	80–90	3"	M10	100	130	1
322408118	90–102	3 1/2"	M12	115	150	1
322408121	100–108	3 3/4"	M12	121	157	1
322408135	102–114	4"	M12	125	170	1
322408145	126–133	4 3/4"	M12	145	190	1
322408157	131–140	5"	M14	155	200	1
322408175	150–159	5 1/2"	M14	175	210	1
322408185	168	6"	M14	180	220	1
322408210	193	7"	M14	210	250	1
322408233	219	8"	M14	230	280	1

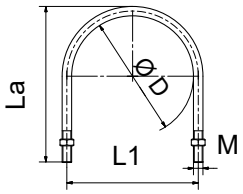

- ☑ material: steel
- ☑ galvanized

ROUND STEEL U-BOLT EXTENDED

Ord. Code	Ø D (mm)	Inch	M	L1 (mm)	La (mm)	Package in pcs
322420001	33,7	1"	M10	44	107	1
322420002	42,4	1 1/4"	M10	57	134	1
322420003	48,3	1 1/2"	M10	59	143	1
322420004	60,3	2"	M10	71	154	1
322420005	76,1	2 1/2"	M10	92	171	1
322420006	89	3"	M10	100	187	1
322420007	114	4"	M10	125	210	1
322420008	139,7	5"	M10	148	235	1
322420009	168,3	6"	M10	176	268	1

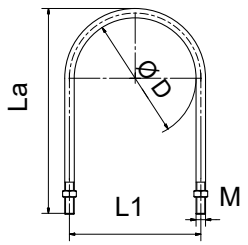

- ☑ material: steel
- ☑ galvanized

ROUND STEEL U-BOLT ČSN 130725

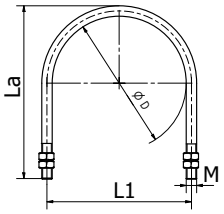

- ☑ material: steel
- ☑ galvanized

Ord. Code	Ø D (mm)	M	L1 (mm)	La (mm)	Package in pcs
322400010	20	M6	26	39	1
322400015	25	M6	31	45	1
322400020	30	M8	39	56	1
322400025	36	M8	42	61	1
322400032	45	M8	55	72	1
322400040	51	M10	63	81	1
322400050	63	M10	73	92	1
322400065	80	M12	95	110	1
322400080	94	M12	105	130	1
322400100	116	M16	130	160	1
322400125	145	M16	160	190	1
322400150	170	M16	185	220	1
322400200	227	M20	247	284	1
322400250	284	M20	304	342	1
322400300	334	M20	354	392	1
322400350	365	M20	385	423	1

HOSE CLAMP

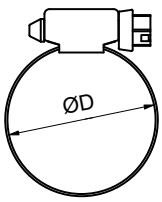

Ord. Code	Ø D (mm)	Width (mm)	Package in pcs
390000812	8–12	9	25
390001016	10–16	9	25
390001220	12–20	9	25
390001625	16–25	9	25
390002032	20–32	9	25
390002540	25–40	9	25
390003250	32–50	9	25
390004060	40–60	9	25
390005070	50–70	9	25
390006080	60–80	9	25
390007090	70–90	9	10
390008010	80–100	9	10
390009011	90–110	9	10
390010012	100–120	9	10
390011013	110–130	9	10
390012014	120–140	9	10
390013015	130–150	9	10
390014016	140–160	9	10
390018020	180–200	12	10

- ☑ material: steel
- ☑ galvanized

info@solida.cz +420 465 531 059 www.solidacz.com

INSULATING PIPE CLAMPS KX

Ord. Code	Ø D (mm)	Thickness Insulation (mm)	M	Outer Ø of insulation (mm)	Package in pcs
346813010	10	13	M8	36	1
346813012	12	13	M8	38	1
346813015	15	13	M8	41	1
346813018	18	13	M8	44	1
346813022	22	13	M8	48	1
346813028	28	13	M8	54	1
346813035	35	13	M8	61	1
346813042	42	13	M8/M10	68	1
346813048	48	13	M8/M10	74	1
346813054	54	13	M8/M10	80	1
346813057	57	13	M8/M10	83	1
346813060	60	13	M8/M10	86	1
346813064	64	13	M8/M10	92	1
346813070	70	13	M8/M10	98	1
346813076	76	13	M8/M10	104	1
346813089	89	13	M8/M10	117	1
346813102	102	13	M8/M10	136	1
346813108	108	13	M8/M10	136	1
346813114	114	13	M8/M10	144	1
346813133	133	13	M8/M10	163	1
346813140	140	13	M8/M10	170	1
346813160	160	13	M12/M16	190	1
346813168	168	13	M12/M16	196	1
346813219	219	13	M12/M16	247	1
346813273	273	13	M12/M16	301	1

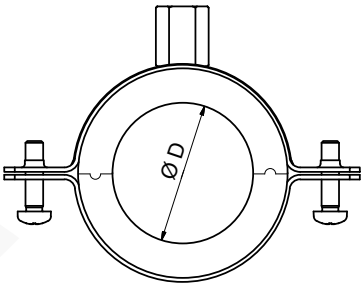

- ☑ for use in combination with soft insulation materials
- ☑ material: PIR-matter without FCKW
- ☑ temperature range: -45 °C to +105 °C
- ☑ includes housing + sleeve without damping insert
- ☑ housing density: 120kg/m3

Ord. Code	Ø D (mm)	Thickness Insulation (mm)	M	Outer Ø of insulation (mm)	Package in pcs
346819010	10	19	M8	48	1
346819012	12	19	M8	50	1
346819015	15	19	M8	53	1
346819018	18	19	M8	56	1
346819020	20	19	M8	56	1
346819022	22	19	M8	60	1
346819028	28	19	M8/M10	66	1
346819035	35	19	M8/M10	73	1
346819042	42	19	M8/M10	80	1
346819048	48	19	M8/M10	86	1
346819054	54	19	M8/M10	92	1
346819057	57	19	M8/M10	95	1
346819060	60	19	M8/M10	98	1
346819064	64	19	M8/M10	104	1
346819070	70	19	M8/M10	110	1
346819076	76	19	M8/M10	116	1
346819089	89	19	M8/M10	129	1
346819102	102	19	M8/M10	142	1
346819108	108	19	M8/M10	148	1
346819114	114	19	M8/M10	156	1
346819133	133	19	M8/M10	175	1
346819140	140	19	M8/M10	182	1
346819160	160	19	M12/M16	202	1
346819168	168	19	M12/M16	208	1
346819219	219	19	M12/M16	259	1
346819273	273	19	M12/M16	313	1

INSULATING PIPE CLAMPS KX

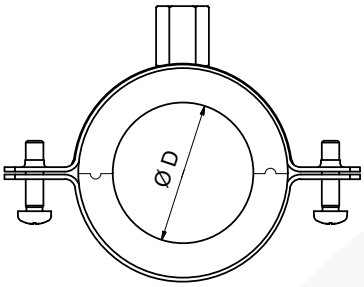

- ☑ for use in combination with soft insulation materials
- ☑ material: PIR-matter without FCKW
- ☑ temperature range: -45 °C to +105 °C
- ☑ includes housing + sleeve without damping insert
- ☑ housing density: 120kg/m3

Ord. Code	Ø D (mm)	Thickness Insulation (mm)	M	Outer Ø of insulation (mm)	Package in pcs
346825010	10	25	M8/M10	60	1
346825012	12	25	M8/M10	62	1
346825015	15	25	M8/M10	65	1
346825018	18	25	M8/M10	68	1
346825022	22	25	M8/M10	72	1
346825028	28	25	M8/M10	78	1
346825035	35	25	M8/M10	85	1
346825042	42	25	M8/M10	92	1
346825048	48	25	M8/M10	98	1
346825054	54	25	M8/M10	104	1
346825057	57	25	M8/M10	107	1
346825060	60	25	M8/M10	110	1
346825064	64	25	M8/M10	116	1
346825070	70	25	M8/M10	122	1
346825076	76	25	M8/M10	128	1
346825089	89	25	M8/M10	141	1
346825102	102	25	M8/M10	154	1
346825108	108	25	M8/M10	160	1
346825114	114	25	M8/M10	168	1
346825133	133	25	M12/M16	187	1
346825140	140	25	M12/M16	194	1
346825160	160	25	M12/M16	214	1
346825168	168	25	M12/M16	220	1
346825219	219	25	M12/M16	271	1
346825273	273	25	M12/M16	325	1

Ord. Code	Ø D (mm)	Thickness Insulation (mm)	M	Outer Ø of insulation (mm)	Package in pcs
346832010	10	32	M8/M10	60	1
346832012	12	32	M8/M10	62	1
346832015	15	32	M8/M10	65	1
346832018	18	32	M8/M10	68	1
346832022	22	32	M8/M10	72	1
346832028	28	32	M8/M10	78	1
346832035	35	32	M8/M10	85	1
346832042	42	32	M8/M10	92	1
346832048	48	32	M8/M10	98	1
346832054	54	32	M8/M10	104	1
346832057	57	32	M8/M10	107	1
346832060	60	32	M8/M10	110	1
346832064	64	32	M8/M10	116	1
346832070	70	32	M8/M10	122	1
346832076	76	32	M8/M10	128	1
346832089	89	32	M8/M10	141	1
346832102	102	32	M8/M10	154	1
346832108	108	32	M8/M10	160	1
346832114	114	32	M8/M10	168	1
346832133	133	32	M12/M16	187	1
346832140	140	32	M12/M16	194	1
346832160	160	32	M12/M16	214	1
346832168	168	32	M12/M16	220	1
346832219	219	32	M12/M16	271	1
346832273	273	32	M12/M16	325	1

info@solida.cz +420 465 531 059 www.solidacz.com

PIPE CLAMP INSULATING TYPE 170 A 175

For attaching a fixed cooling point.

TYPE 170

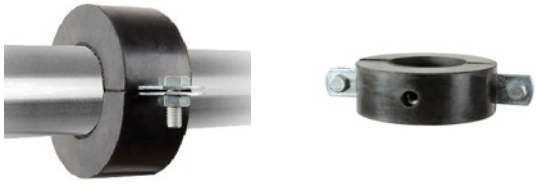

Pipe clamps are available to order in sizes from 76/30 mm up to 711/60 mm (inner diameter / insulation thickness)

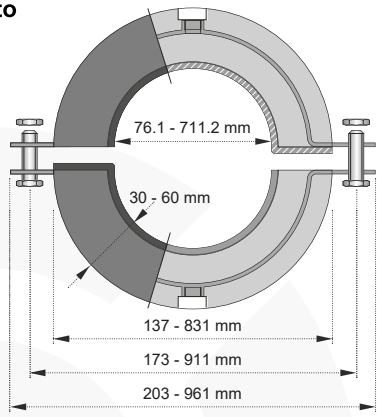

TYPE 175

Pipe clamps are available to order in sizes from 17/30 mm up to 219/60 mm (inner diameter / insulation thickness)

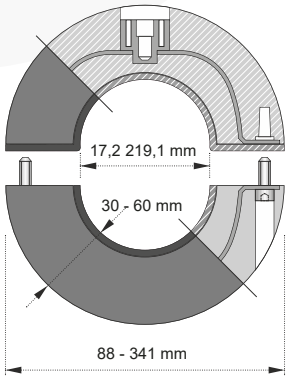

- ☑ material: polyurethane foam
- ☑ foam density: 250 kg/m3
- ☑ temperature range: -50 °C to +105 °C

COPPER PIPE BRACKET WITH METAL NUT M6

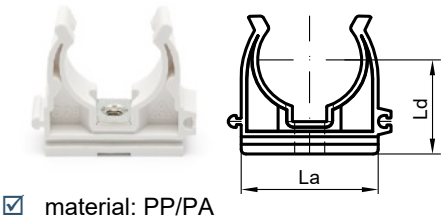

- ☑ material: PP/PA
- ☑ resistance to 110 ºC

Ord. Code	Ø D (mm)	La (mm)	Ld (mm)	Package in pcs
384005012	12	28,2	19,9	50
384005015	15	29,8	20,6	50
384005018	18	33,6	22,3	50
384005022	22	38,7	23,9	50

COPPER PIPE TWIN-BRACKET WITH METAL NUT M6

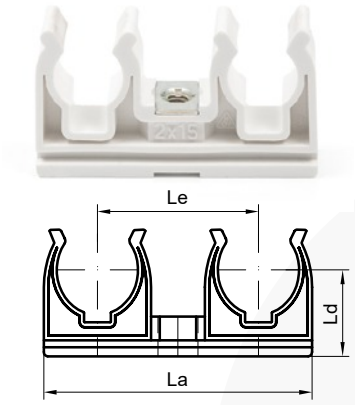

- ☑ material: PP/PA
- ☑ resistance to 110 ºC

Ord. Code	Ø D (mm)	La (mm)	Ld (mm)	Le (mm)	Package in pcs
384005212	2x12	51,6	21,1	33,1	50
384005215	2x15	58,1	22,7	35,9	50
384005218	2x18	67,2	24,2	40,9	50
384005222	2x22	75,6	26,2	44,9	50

COPPER PIPE BRACKET WITH A CLIP AND METAL NUT M6

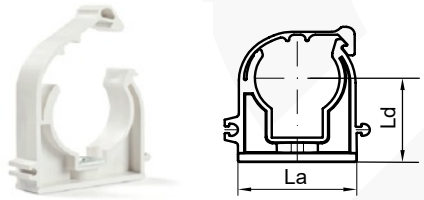

- ☑ material: PP/PA
- ☑ resistance to 110 ºC

Ord. Code	Ø D (mm)	La (mm)	Ld (mm)	Package in pcs
384034015	15	28,9	20,8	50
384034018	18	32,2	22,2	50
384034022	22	37,4	25	50
384034028	28	45,5	28	50

COPPER PIPE TWIN-BRACKET WITH A CLIP AND METAL NUT M6

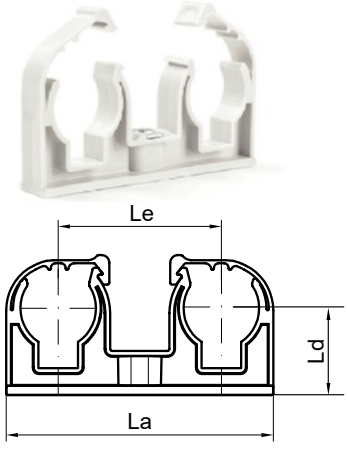

- ☑ material: PP/PA
- ☑ resistance to 110 ºC

Ord. Code	Ø D (mm)	La (mm)	Ld (mm)	Le (mm)	Package in pcs
384044015	2x15	56	20,5	34,8	50
384044018	2x18	65,4	22,2	40	50
384044022	2x22	75,5	27,4	45	50
384044028	2x28	91,4	27,7	52,7	50

info@solida.cz +420 465 531 059 www.solidacz.com

PLASTIC PIPE BRACKET

Ord. Code	Ø D (mm)	La (mm)	Ld (mm)	Package in pcs
384000108	8,5	24,5	15,7	50
384000116	16	33,7	15,7	50
384000120	20	38,1	15,8	50
384000125	25	42,6	15,8	50
384000132	32	49,4	15,7	50

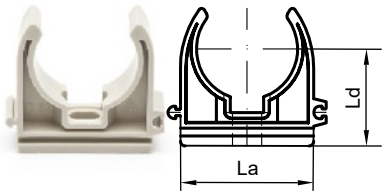

- ☑ material: PP/PA
- ☑ resistance to 90 °C

PLASTIC PIPE TWIN-BRACKET

Ord. Code	Ø D (mm)	La (mm)	Ld (mm)	Le (mm)	Package in pcs
384000161	2x16	65,3	24,2	40,4	50
384000201	2x20	70,5	25,5	43,4	50
384000251	2x25	89	27,8	54,7	50
384000234	2x32	106,4	31,9	63,2	50

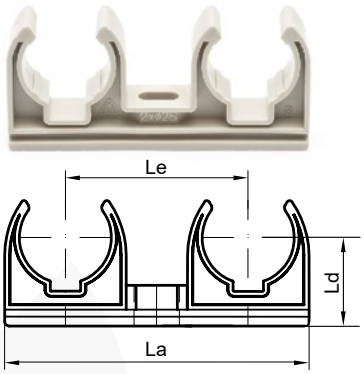

- ☑ material: PP/PA
- ☑ resistance to 90 °C

PLASTIC PIPE BRACKET WITH A CLIP

Ord. Code	Ø D (mm)	La (mm)	Ld (mm)	Package in pcs
384003020	20	36,9	25,1	50
384003025	25	43	27,7	50
384003032	32	52,8	30,4	50
384003040	40	63,1	35,7	50
384003050	50	77,7	40,3	25
384003063	63	94,7	51	25

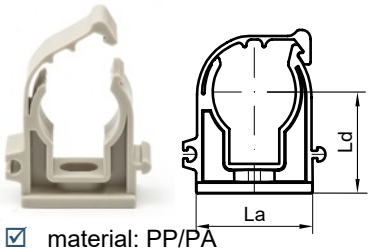

- ☑ material: PP/PA
- ☑ resistance to 90 °C

PLASTIC PIPE TWIN-BRACKET WITH A CLIP

Ord. Code	Ø D (mm)	La (mm)	Ld (mm)	Le (mm)	Package in pcs
384003220	2x20	709	25,2	42,8	50
384003225	2x25	88,5	27,8	54,5	50

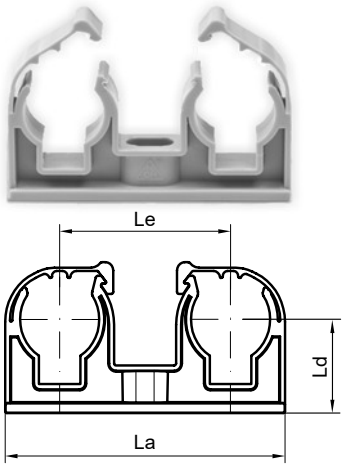

- ☑ material: PP/PA
- ☑ resistance to 90 °C

VENTILATION PIPE CLAMP

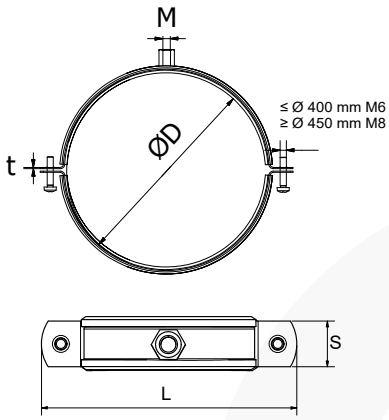

- ☑ material: steel
- ☑ galvanized
- ☑ sound insulation insert: EPDM

Ord. Code	Ø D (mm)	L (mm)	Maximum load in N	M	S x t (mm)	Package in pcs
318000080	80	130	600	M8/M10	25×1,5	50
318000090	90	140	600	M8/M10	25×1,5	50
318000100	100	150	600	M8/M10	25×1,5	50
318000112	112	162	600	M8/M10	25×1,5	25
318000125	125	175	600	M8/M10	25×1,5	25
318000140	140	190	600	M8/M10	25×1,5	25
318000150	150	200	600	M8/M10	25×1,5	25
318000160	160	210	600	M8/M10	25×1,5	25
318000180	180	230	600	M8/M10	25×1,5	25
318000200	200	250	600	M8/M10	25×1,5	25
318000224	224	274	600	M8/M10	25×1,5	25
318000250	250	300	600	M8/M10	25×2,0	25
318000280	280	330	600	M8/M10	25×2,0	25
318000300	300	350	600	M8/M10	25×2,0	15
318000315	315	365	600	M8/M10	25×2,0	15
318000355	355	405	600	M8/M10	25×2,0	10
318000400	400	450	600	M8/M10	25×2,0	10
318000450	450	500	800	M8/M10	25×2,5	1
318000500	500	550	800	M8/M10	25×2,5	1
318000560	560	610	800	M8/M10	25×2,5	1
318000600	600	650	800	M8/M10	25×2,5	1
318000630	630	680	800	M8/M10	25×2,5	1
318000710	710	760	800	M8/M10	25×2,5	1
318000800	800	850	800	M8/M10	25×2,5	1
318000900	900	950	800	M8/M10	25×2,5	1
318001000	1000	1050	800	M8/M10	25×2,5	1
318001120	1120	1170	800	M8/M10	25×2,5	1
318001250	1250	1300	800	M8/M10	25×2,5	1
318001400	1400	1450	800	M8/M10	25×2,5	1
318001600	1600	1650	800	M8/M10	25×2,5	1

C CLIP

- ☑ material: steel
- ☑ galvanized

Ord. Code	Screw	Package in pcs
322039013	M8x20	100

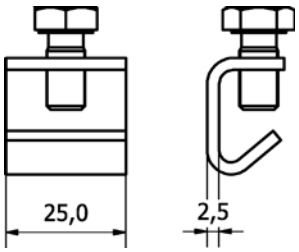

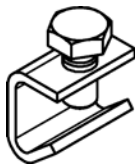

info@solida.cz +420 465 531 059 www.solidacz.com

HOLDER - ZV, ZL, ZZ

Ord. Code	Hole (mm)	L (mm)	Dimensions TxC (mm)	Allowable load (N)	Package in pcs
Typ ZV					
322040000	8	67	2,5x30	500	50
Typ ZL					
322040010	8	80	2,5x30	400	50
Typ ZZ					
322040020	8	80	2,5x30	500	50

Type ZV

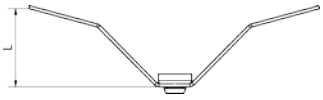

Type ZL

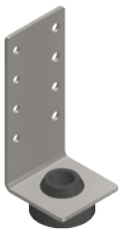

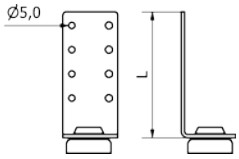

Type ZZ

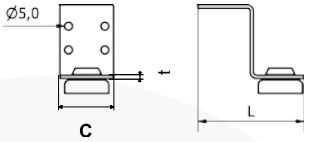

- ☑ material: steel
- ☑ galvanized
- ☑ includes a silencer

SUSPENSION DAMPER

Ord. Code	Thread M / Hole (mm)	Dimensions (mm)	Package in pcs
Silencer			
322050010	8	3x30	50
RSG Damping mount			
321301088	M12	120x40x4	1
321601089	M10	120x40x4	1
321601092	M8	120x40x4	1

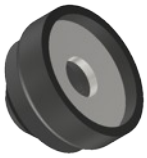

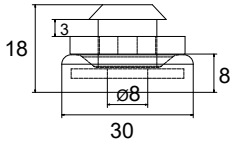

Solutions for SILENT pipes - pipes do not transmit noise, vibrations to building structures

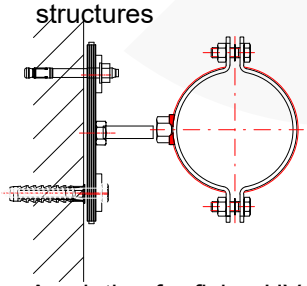

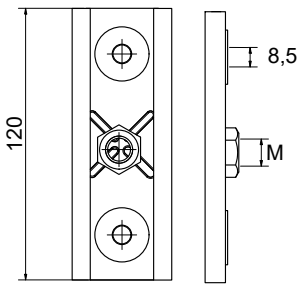

A solution for fixing HVAC equipment - it does not transmit noise, vibrations to building

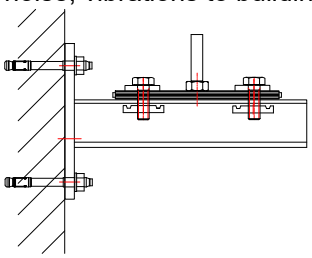

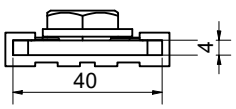

Isolated fixed point

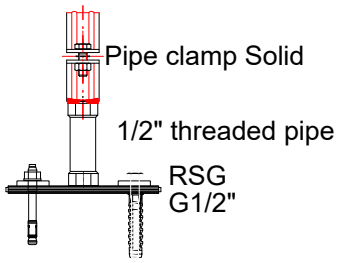

- ☑ EPDM damping insulation insert
- ☑ RSG sound-absorbing bracket separates the base plate from the wall, ceiling, beam or console, does not transmit noise, vibrations to building structures

SOLIDA

FASTENING SYSTEMS

MOUNTING SYSTEM

pp: 18. - 30.

CZECH MANUFACTURER OF FASTENING SYSTEMS
www.solidacz.com

FIXING RAILS

Ord. Code	L (mm)	t (mm)	Package in pcs
Rails 27/18			
331270200	200	1,25	10
331270400	400	1,25	10
331270600	600	1,25	10
331272000	2000	1,25	1
331273000	3000	1,25	1
Rails 28/30			
331283020	2000	1,75	1
331283030	3000	1,75	1
331283040	6000	1,75	1
Rails 38/40			
331384023	2000	1,5	1
331384033	3000	1,5	1
331384063	6000	1,5	1
331384020	2000	2	1
331384030	3000	2	1
331384060	6000	2	1
Fixing rails 40/60			
331404060	6000	2,5	1
Fixing rails 40/60 - Double			
331404061	6000	2,5	1

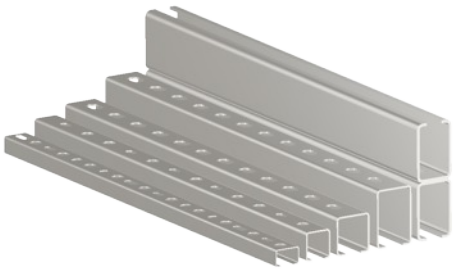

- ☑ material: steel
- ☑ galvanized
- ☑ the endless meter is stamped on one side
- ☑ double beams are welded on both sides by 25 cm in a CO2 atmosphere

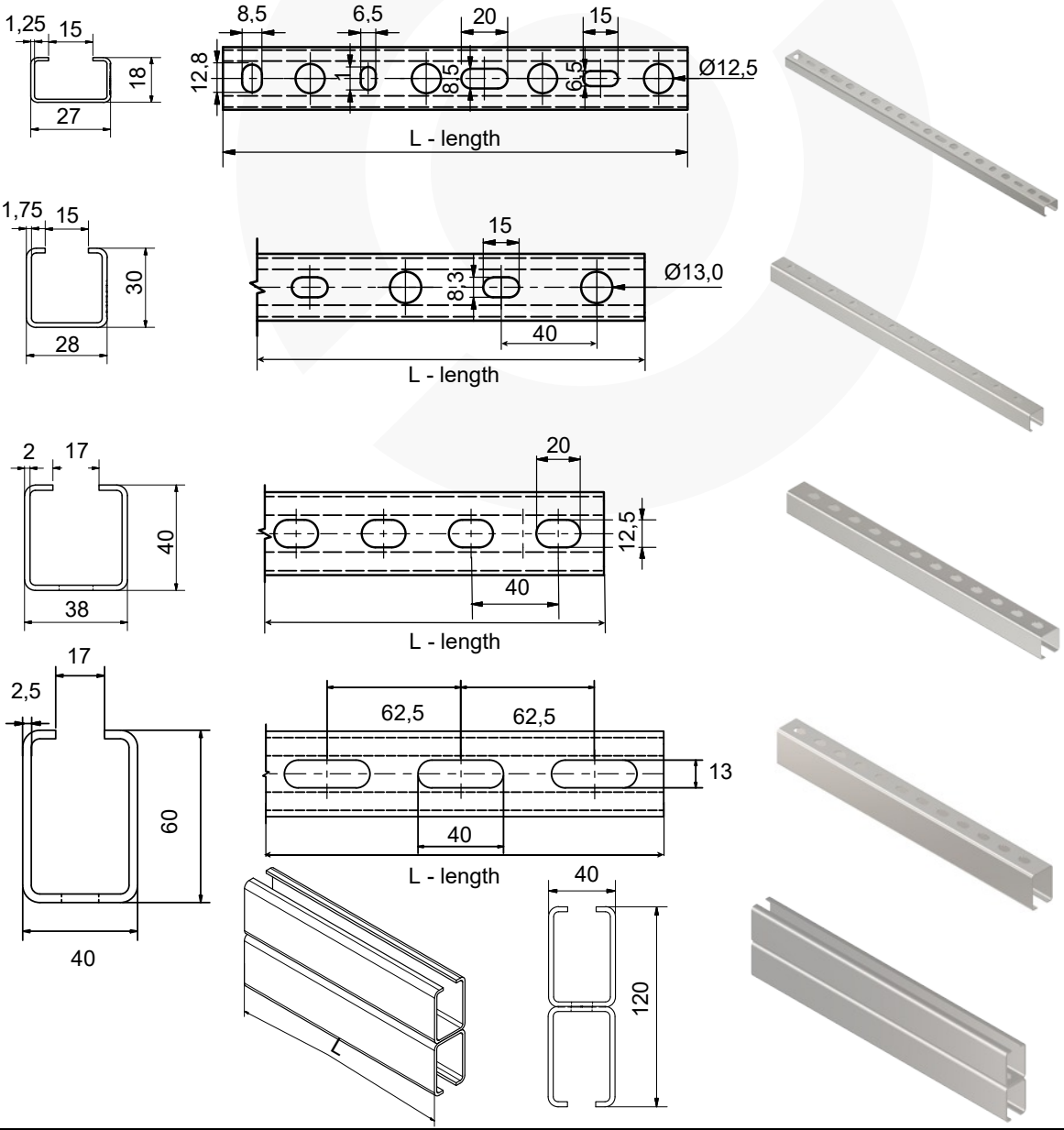

FIXING RAILS ST

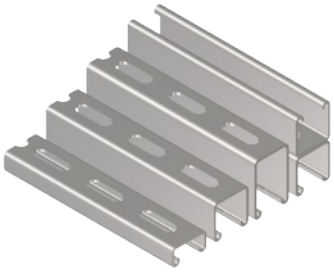

Ord. Code	TYPE	L (mm)	t (mm)	Package in pcs
		Single		
332712182	41/21	2000	1,5	1
332712181	41/21	3000	1,5	1
332712165	41/21	6000	1,5	1
332712120	41/21	2000	2,5	1
332712130	41/21	3000	2,5	1
332712161	41/21	6000	2,5	1
332714125	41/41	2000	1,8	1
332714135	41/41	3000	1,8	1
332714165	41/41	6000	1,8	1
332714120	41/41	2000	2,5	1
332714130	41/41	3000	2,5	1
332714161	41/41	6000	2,5	1
332726165	41/62	6000	2,5	1
		Double		
332714159	41/41 D (41/82)	6000	2,5	1
332726166	41/62D (41/124)	6000	2,5	1

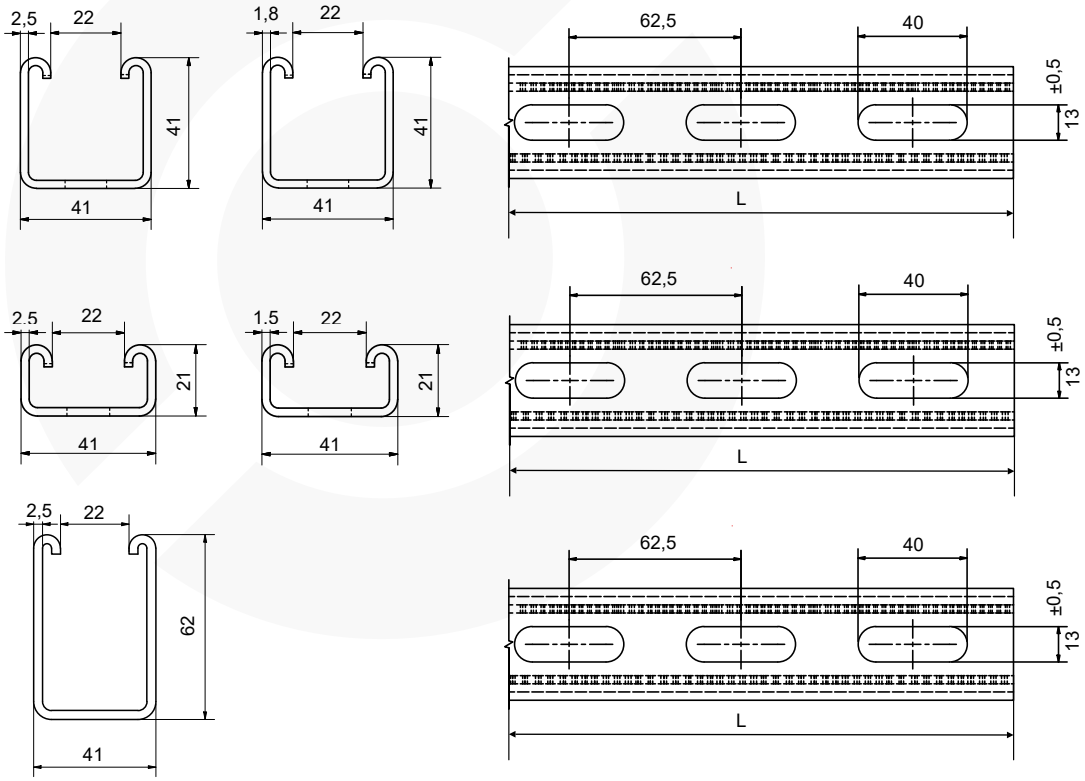

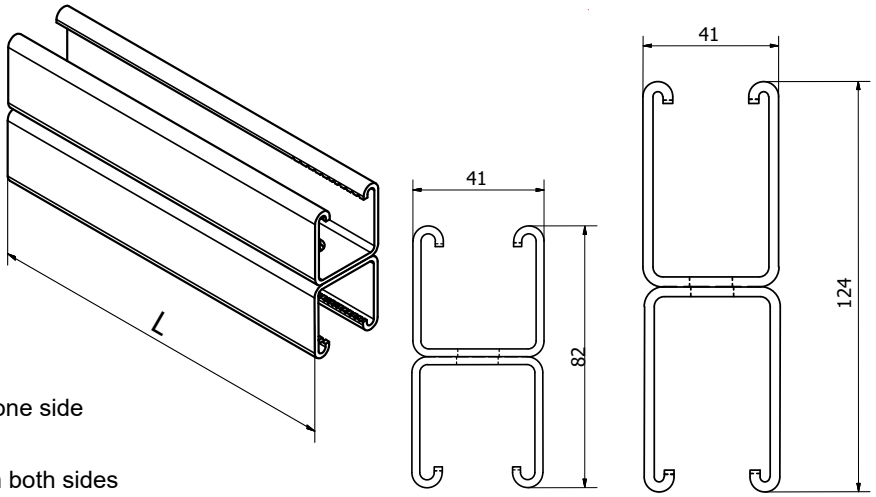

- ☑ material: steel
- ☑ galvanized
- ☑ infinity metre is stamped on one side
- ☑ knurled to a depth of 0.4mm
- ☑ double beams are welded on both sides 25 cm each in CO2 atmosphere

info@solida.cz +420 465 531 059 www.solidacz.com

RAIL CONNECTORS

Ord. Code	M	Profiles	Package in pcs
		Rail connector	
338000010	M8	27/18 - 28/30	50
338000015	M10	38/40	20
		Rail connector ST	
332904002	M10	41/21 - 41/62 D	20

Rail connector ST

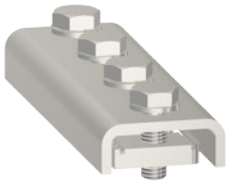

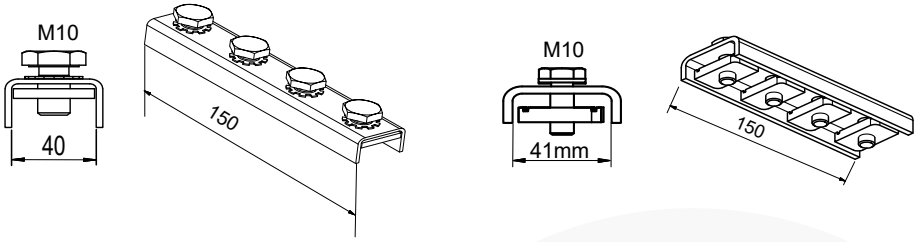

- ☑ material: steel
- ☑ galvanized
- ☑ with pre-assembled nut

RAIL CONNECTOR CROSS

Ord. Code	La (mm)	Lb (mm)	Lc (mm)	S x t (mm)	H (mm)	Ø D (mm)	Profiles	Package in pcs
339013840	116	84	42	40x4	40	11	41/41	1
339013841	116	84	42	40x4	60	11	40/60 - 41/62	1
339014098	116	84	42	40x4	80	11	D41/41	1
339014099	116	84	42	40x4	120	11	D62/41	1
339014124	206	173	123	40x4	40	12	41/124 flatways	1

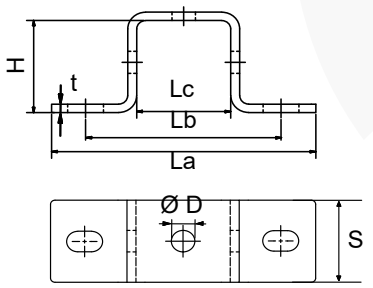

41/124 flatways

- ☑ material: steel
- ☑ galvanized

REMOVEABLE CAP

Ord. Code	Profiles	Package in pcs
333002718	27/18	100
333002830	28/30	100
333003840	38/40 - 41/41	100
333004060	40/60 - 41/62	50
333384020	41/21	100

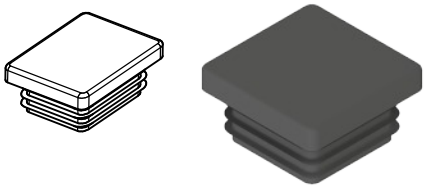

- ☑ material: polyethylen

RAIL CONNECTOR L, T

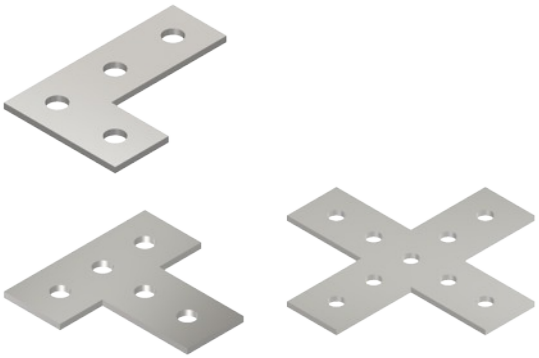

Ord. Code	TYPE	Profiles	Material (mm)	Package in pcs
336512830	L	27/18 - 28/30	4	1
336522830	T	27/18 - 28/30	4	1
336584060	L	38/40 + fixing rails ST	4	1
336594060	T	38/40 + fixing rails ST	4	1
336594061	Cross	38/40 + fixing rails ST	4	1

For profiles 27/18 - 28/30

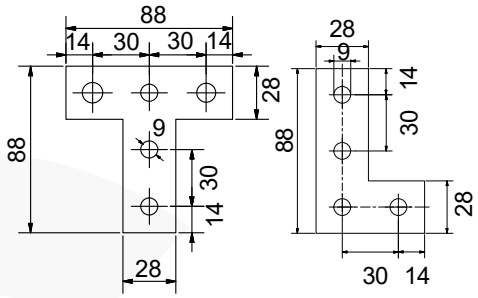

For profiles 38/40 and fixing rails ST

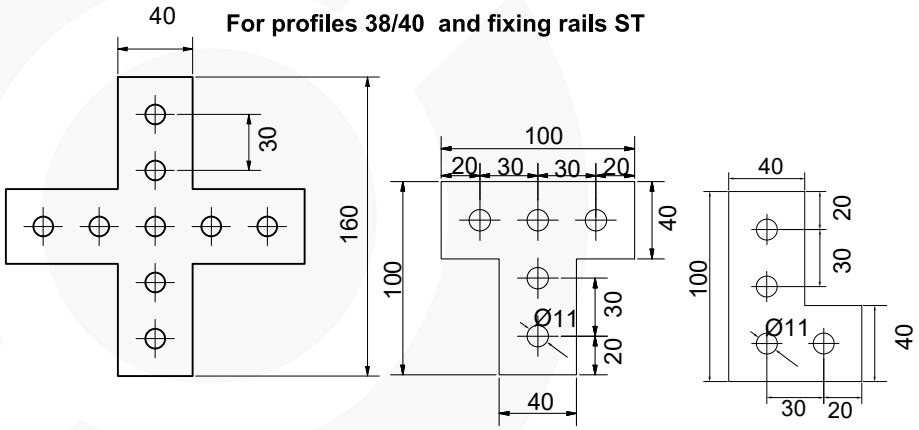

- ☑ material: steel
- ☑ galvanized

GROOVED RUBBER PAD

Ord. Code	Dimensions	Package in pcs
331305001	300x150x8	1
331305002	600x300x8	1
331305003	150x75x8	1

- ☑ hardness: 36-45 IRHD / 35-44 ShA
- ☑ temperature range: -40 °C to +70 °C
- ☑ strength: min. 3.0 MPa
- ☑ ductility: min. 400%

info@solida.cz +420 465 531 059 www.solidacz.com

CANTILEVER ARM

Ord. Code	L (mm)	Wall plate size (mm)	Material thickness (mm)	Package in pcs
CANTILEVER ARMS 27/18				
332271820	200	120×40×4	1,25	20
332271830	300	120×40×4	1,25	20
332271850	500	120×40×4	1,25	10
332271860	600	120×40×4	1,25	1
CANTILEVER ARMS 28/30				
332283020	200	120×40×4	1,75	10
332283030	300	120×40×4	1,75	10
332283044	440	120×40×4	1,75	10
332283050	500	120×40×4	1,75	10
332283060	600	120×40×4	1,75	1
332283075	750	120×40×4	1,75	1
332283090	900	120×40×4	1,75	1
CANTILEVER ARMS 38/40				
332384420	200	120×40×6	2	10
332384430	300	120×40×6	2	10
332384440	400	120×40×6	2	7
332384450	500	120×40×6	2	7
332384460	600	120×40×6	2	1
332384471	700	120×40×6	2	1
332384475	750	120×40×6	2	1
332384480	800	120×40×6	2	1
332384490	900	120×40×6	2	1
332384495	950	120×40×6	2	1

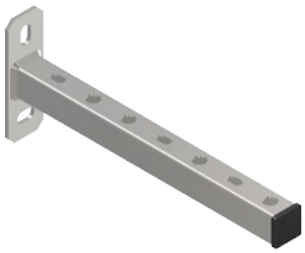

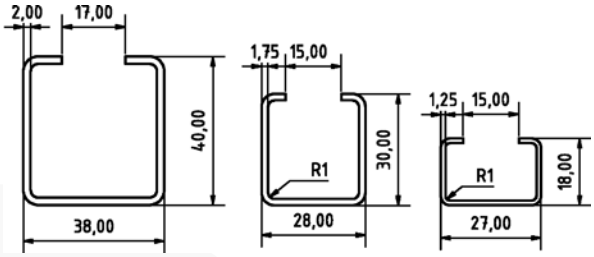

- ☑ material: steel
- ☑ galvanized

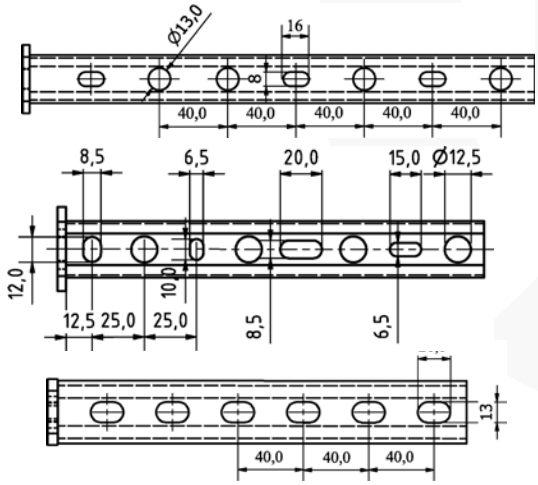

27/18 - 28/30

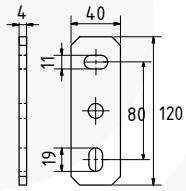

38/40

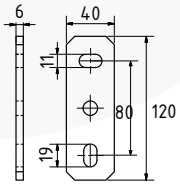

RAIL PROP FOR FIXING RAILS

Ord. Code	L (mm)	Profiles	Package in pcs
336017301	300	30x30	1
336017550	550	30x30	1

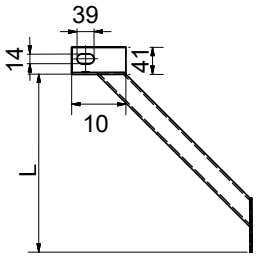

- ☑ material: steel
- ☑ galvanized
- ☑ applicable to all fixing rails

CANTILEVER ARM ST

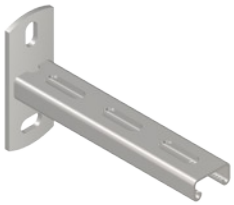

41/21

41/41

41/62

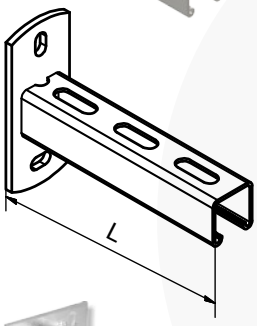

Ord. Code	Type	L (mm)	Wall plate size (mm)	Package in pcs
		Single		
332821200	41 / 21	200	125×50×5	1
332821250	41 / 21	250	125×50×5	1
332821300	41 / 21	300	125×50×5	1
332821400	41 / 21	400	125×50×5	1
332821500	41 / 21	500	125×50×5	1
332821600	41 / 21	600	125×50×5	1
332821750	41 / 21	750	125×50×5	1
332841200	41 / 41	200	125×50×5	1
332841300	41 / 41	300	125×50×5	1
332841450	41 / 41	450	125×50×5	1
332841500	41 / 41	500	125×50×5	1
332841600	41 / 41	600	125×50×5	1
332841750	41 / 41	750	125×50×5	1
332841980	41 / 41	1000	125×50×5	1
332862300	41 / 62	300	145×60×6	1
332862400	41 / 62	400	145×60×6	1
332862450	41 / 62	450	145×60×6	1
332862500	41 / 62	500	145×60×6	1
332862600	41 / 62	600	145×60×6	1
332862700	41 / 62	700	145×60×6	1
332862750	41 / 62	750	145×60×6	1
332862800	41 / 62	800	145×60×6	1
332862900	41 / 62	900	145×60×6	1
332862910	41 / 62	1000	145×60×6	1

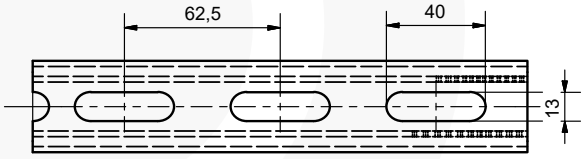

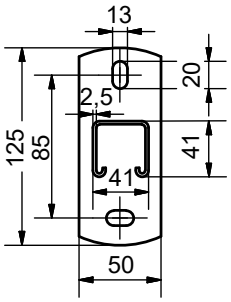

Cantilever arms with big wall plate and double cantilever arms are avaiable to order in dimensions from 200 mm to 1000 mm

Dimensions of wallplate 120 x 120 x 6 mm

- ☑ material: steel
- ☑ galvanized

CANTILEVER ARM KLS

Ord. Code	H (mm)	K (mm)	L (mm)	Profiles	Package in pcs
336020130	150	0	300	27/18 (white)	1
336020400	315	95	400	28/30	1
336020600	395	95	600	28/30	1
336030400	360	55	400	38/40	1
336030600	395	55	600	38/40	1
336030770	395	55	770	38/40	1

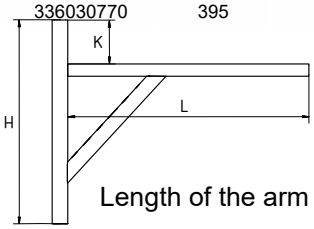

Length of the arm can be customized.

- ☑ material: steel
- ☑ galvanized

info@solida.cz +420 465 531 059 www.solidacz.com

ANGLE BRACKET

Ord. Code	Material (mm)	Dimensions (mm)	Package in pcs
334200200	4	200 x 200	1

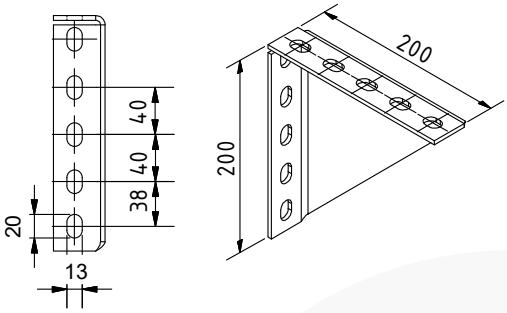

- ☑ material: steel
- ☑ galvanized

U-SHAPED WASHER

Ord. Code	Ø D (mm)	L (mm)	H (mm)	t x W (mm)	Profiles	Package in pcs
331527084	8,5	25	10	2,5x28	27/18 - 28/30	100
331527105	10,5	25	10	2,5x28	27/18 - 28/30	100
331538105	10,5	25	10	2,5x38	38/40	100
331500027	10,5	25	12	4x28	27/18 - 28/30	100
331500038	12,5	38	13	4x40	38/40	100
331500040	13	50	13	4x42	41/21 - D41/62	100

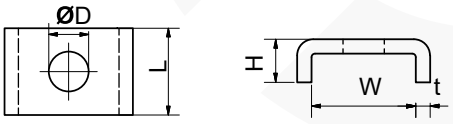

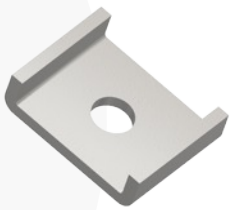

- ☑ material: steel
- ☑ galvanized

BEAM CLAMP

Ord. Code	M	La (mm)	L (mm)	D (mm)	t (mm)	Profiles	Package in pcs
338002718	M6	0 – 29	85	32	5	27/18 - 28/30	25
338003840	M8	0 – 24,5	108	42	5	38/40 - 41/62	20
338013840	M10	0 – 24.5	108	42	5	38/40 - 41/62	20
338013840D	M10 doubled	0 – 24.5	145	42	5	41/41D	20
339004060D	M10 doubled	0 – 24.5	185	42	5	40/60 - 41/62D	20

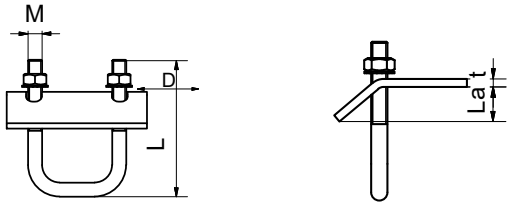

- ☑ material: steel
- ☑ galvanized

ANGLE L4 FIX

Ord. Code	Dimensions (mm)	Ø (mm)	Package in pcs
332904003	95x95x40x6	10,5	1

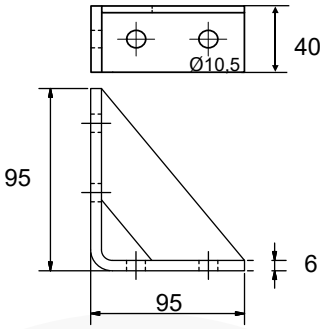

- ☑ material: steel
- ☑ galvanized

ROOF FEET

Ord. Code	Dimensions (mm)	Equipment	Package in pcs
3X0000110	300x300	2x spirit level	1
3X0000111	300x300	2x spirit level + legs	1

- ☑ designed for fixing rails ST 41x41
- ☑ material: polypropylene reinforced by glass fiber (30%)
- ☑ load: max. 2200 N

- ☑ Custom offers at sales representatives.

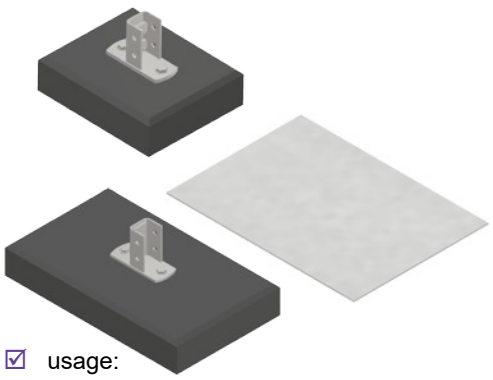

Ord. Code	Dimensions (mm)	Equipment	Package in pcs
3X0000012	476x238x53	Sadd. support ST	1
3X0000014	476x238x53	Sadd. support galv. ST	1
3X0000015	238x238x53	Sadd. support 38/40	1
	Felt pad		
3X0000001	Plst 500x260x4mm	large roof heel	1
3X0000002	Plst 260x260x4mm	small roof heel	1

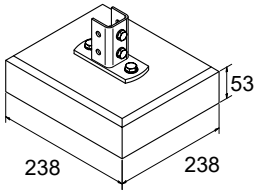

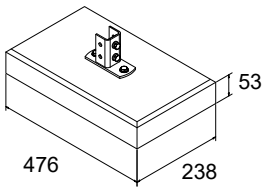

- ☑ usage:
  - ☑ ventilation and air conditioning units
  - ☑ solar panels
  - ☑ heat pumps
  - ☑ cooling units

info@solida.cz +420 465 531 059 www.solidacz.com

MOUNTING ANGLE

Ord. Code	Type	Angle	Dimensions (mm)	Profiles	Package in pcs
337002790	Mounting angle 27 - 90°	90°	87 x 81 x 25 x 4	27/18 - 28/30	25
337002745	Mounting angle 27 - 45°	45°	76 x 100 x 25 x 4	27/18 - 28/30	25

Mounting angle 27 - 90°

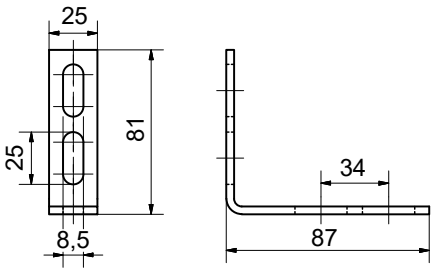

Mounting angle 27 - 45°

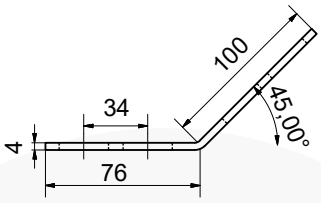

Ord. Code	Type	Angle	Dimensions (mm)	Profiles	Package in pcs
337004090	Mounting angle 38 - 90° 2 holes L2	90°	50 x 40 x 40 x 6	38/40 and for ST 41/21 to 41/62D	20
337005090	Mounting angle 38 - 90° 3 holes L3	90°	85 x 40 x 40 x 6	38/40 and for ST 41/21 to 41/62D	20
337003890	Mounting angle 38 - 90° 4 holes L4	90°	105 x 85 x 40 x 6	38/40 and for ST 41/21 to 41/62D	20
337003845	Mounting angle 38 - 45°	45°	86 x 90 x 40 x 6	38/40 and for ST 41/21 to 41/62D	20

Mounting angle L2

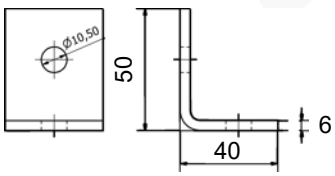

Mounting angle L3

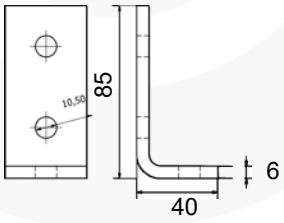

Mounting angle 38 - L4

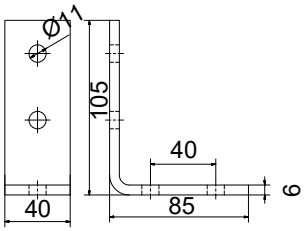

Mounting angle 38 - 45°

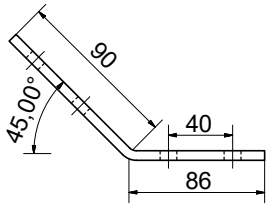

- ☑ material: steel
- ☑ galvanized

WALL PLATE

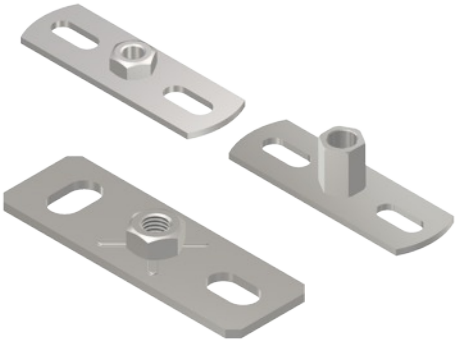

Ord. Code	TYPE	Width x material thickness S x L x t (mm)	Package in pcs
321600854	M8	78x25x2,5	100
321601054	M10	78x25x2,5	100
321601055	M8/M10	78x25x2,5	100
321600885	M8	120x40x4	50
321601085	M10	120x40x4	50
321601087	M12	120x40x4	50
321601090	M16	120x40x4	50
321601285	½“	120x40x4	25
321603485	¾“	120x40x4	25
321610000	1“	120x60x6	1

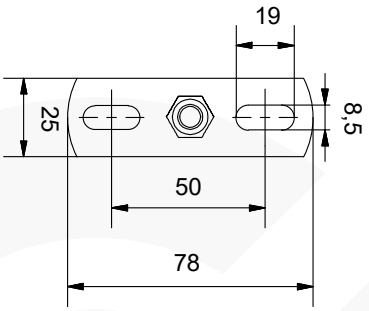

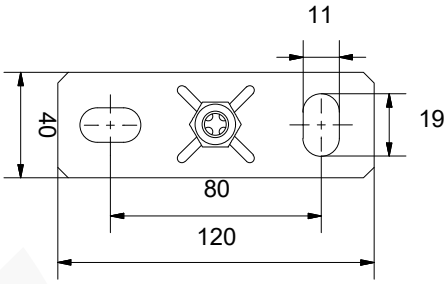

- ☑ material: steel
- ☑ galvanized

ANGULAR BACKING STRAP

Ord. Code	Package in pcs
336015111	1

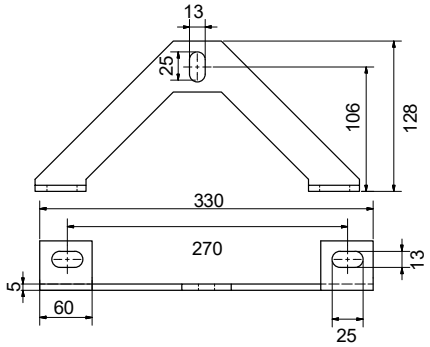

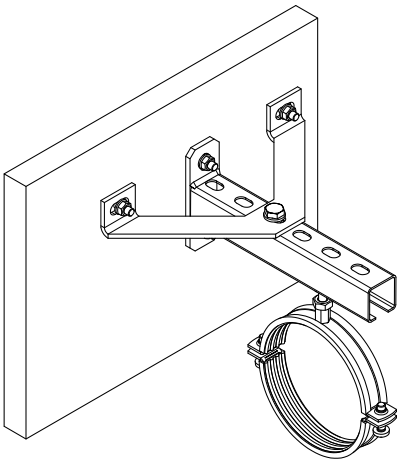

- ☑ material: steel
- ☑ galvanized

info@solida.cz +420 465 531 059 www.solidacz.com

SLIDE TEE-BOLT ASSEMBLY AND ASSEMBLY PLUS

Ord. Code	M	L (mm)	Profiles	Package in pcs
Assembly Sheet Metal				
331100820	M8	20	27/18 - 28/30	100
331100830	M8	30	27/18 - 28/30	100
331100850	M8	50	27/18 - 28/30	100
331100880	M8	80	27/18 - 28/30	100
331100899	M8	100	27/18 - 28/30	100
331101830	M8	30	38/40	100
331101850	M8	50	38/40	100
331101880	M8	80	38/40	100
331101030	M10	30	38/40	100
331101050	M10	50	38/40	100
331101080	M10	80	38/40	100
331101100	M10	100	38/40	100
Assembly plus				
331100821	M8	20	27/18 - 28/30	100
331100831	M8	30	27/18 - 28/30	100
331100851	M8	50	27/18 - 28/30	100
331100881	M8	80	27/18 - 28/30	100
331100898	M8	100	27/18 - 28/30	100
331101831	M8	30	38/40	100
331101851	M8	50	38/40	100
331101882	M8	80	38/40	100
331101031	M10	30	38/40	100
331101051	M10	50	38/40	100
331101081	M10	80	38/40	100
331101101	M10	100	38/40	100

Assembly Sheet Metal 27/18-28-30

Assembly plus

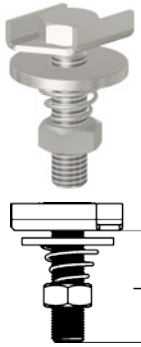

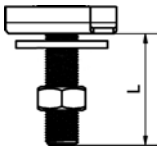

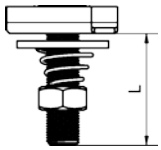

M

Assembly 4T for 27/18-28/30

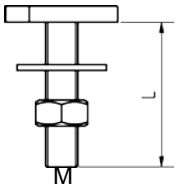

M

- ☑ material: steel
- ☑ galvanized

Ord. Code	M	L (mm)	Profiles	Package in pcs
Sestava 4T				
X331100820	M8	20	27/18 - 28/30	100
X331100830	M8	30	27/18 - 28/30	100
X331100850	M8	50	27/18 - 28/30	100
X331100880	M8	80	27/18 - 28/30	100

SLIDE NUT

Ord. Code	M	Profiles	Package in pcs
331227106	M6	27/18 - 28/30	100
331227108	M8 sheet metal	27/18 - 28/30	100
331227109	M8 4T	27/18 - 28/30	100
331227110	M10	27/18 - 28/30	100
331228308	M8	38/40	100
331228310	M10	38/40	100

Profiles 38/40

Profiles 27/18 + 28/30

M8 Sheet metal

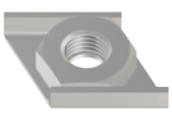

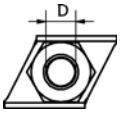

Slide nut 4T

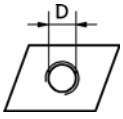

- ☑ material: steel
- ☑ galvanized

SLIDE TEE-BOLT ASSEMBLY ST AND ASSEMBLY ST PLUS

Assembly ST **Assembly ST Plus**

Assembly ST plastic

Ord. Code	M	L (mm)	Profiles	Package in pcs
		Assembly ST		
332903054	M8	40	41/21 - 41/62 D (41/124)	100
332903055	M8	50	41/21 - 41/62 D (41/124)	100
332903058	M8	80	41/21 - 41/62 D (41/124)	100
332903104	M10	40	41/21 - 41/62 D (41/124)	100
332903106	M10	60	41/21 - 41/62 D (41/124)	100
332903108	M10	80	41/21 - 41/62 D (41/124)	100
332903204	M12	40	41/21 - 41/62 D (41/124)	50
332903206	M12	60	41/21 - 41/62 D (41/124)	50
		Assembly ST PLUS with spring		
31120840	M8	40	41/21 - 41/62 D (41/124)	100
31120850	M8	50	41/21 - 41/62 D (41/124)	100
31120880	M8	80	41/21 - 41/62 D (41/124)	100
31121040	M10	40	41/21 - 41/62 D (41/124)	100
31121060	M10	60	41/21 - 41/62 D (41/124)	100
31121080	M10	80	41/21 - 41/62 D (41/124)	100
31121240	M12	40	41/21 - 41/62 D (41/124)	50
31121260	M12	60	41/21 - 41/62 D (41/124)	50
		Assembly ST PLASTIC		
332903001	M8	38	41/21 - 41/62 D (41/124)	1
332903002	M8	48	41/21 - 41/62 D (41/124)	1
332903003	M8	58	41/21 - 41/62 D (41/124)	1
332903004	M8	78	41/21 - 41/62 D (41/124)	1
332903005	M8	98	41/21 - 41/62 D (41/124)	1
332903011	M10	38	41/21 - 41/62 D (41/124)	1
332903012	M10	58	41/21 - 41/62 D (41/124)	1
332903013	M10	78	41/21 - 41/62 D (41/124)	1
332903014	M12	38	41/21 - 41/62 D (41/124)	1
332903015	M12	58	41/21 - 41/62 D (41/124)	1

- ☑ material: steel
- ☑ galvanized
- ☑ pre-assembled

SLIDE NUT ST

Ord. Code	M	Height (mm)	Profiles	Package in pcs
Slide nut ST				
332901006	M6	6	41/21 - 41/62 D (41/124)	100
332901008	M8	8	41/21 - 41/62 D (41/124)	100
332901010	M10	9,1	41/21 - 41/62 D (41/124)	100
332901012	M12	9,1	41/21 - 41/62 D (41/124)	100
Slide nut with washer				
332902106	M6	21	41/21 - 41/62 D (41/124)	1
332902108	M8	21	41/21 - 41/62 D (41/124)	1
332902110	M10	21	41/21 - 41/62 D (41/124)	1
332902112	M12	21	41/21 - 41/62 D (41/124)	1

- ☑ material: steel, polyethylen
- ☑ galvanized

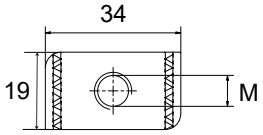

info@solida.cz +420 465 531 059 www.solidacz.com

SADDLE SUPPORT

Ord. Code	Saddle type	Profiles	Wall plate size (mm)	Package in pcs
335000250	Standard	27/18 - 28/30	120x40x4	50
335000255	Standard	38/40	145x60x6	20
335000285	Articulated	27/18 - 28/30	130x4x48	1
335000275	Articulated	38/40	140x4x58	1
335001251	Transverse pre-assembled	27/18 - 28/30	120x40x4	50
335001256	Transverse pre-assembled	38/40	145x60x6	20
338000004	Transverse fixing rail pre-assembled	38/40,40/60	120x40x4	1

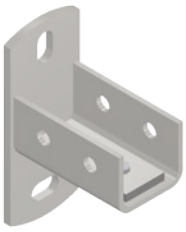

Articulated

Standard 27/18 - 28/30

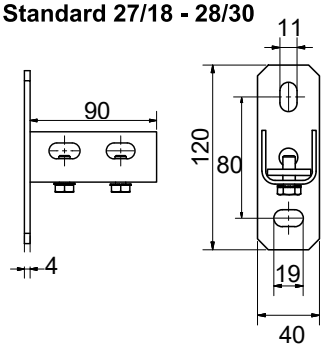

Standard 38/40

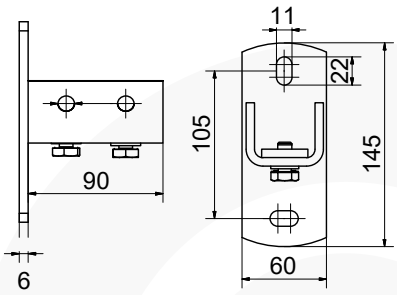

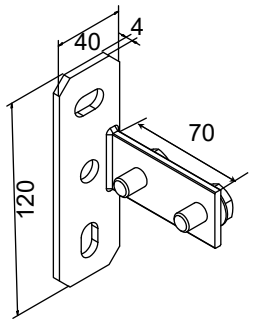

Transverse fixing rail pre-assembled

Transverse pre-assembled

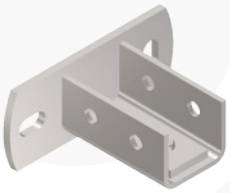

- ☑ material: steel
- ☑ galvanized
- ☑ all with pre-assembled nut

SADDLE SUPPORT ST

Ord. Code	Saddle type	Profiles	Wall plate size (mm)	Package in pcs
335000257	Standard	41/21 - 41/62 D (41/124)	145x60x6	20
335000275	Articulated	41/21 - 41/62 D (41/124)	140x4x58	1
335000295	Stable	41/21 - 41/62 D (41/124)	120x120x5	1

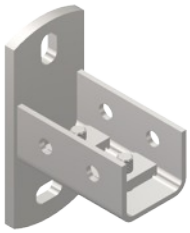

Standard 41/21 - 41/62 D

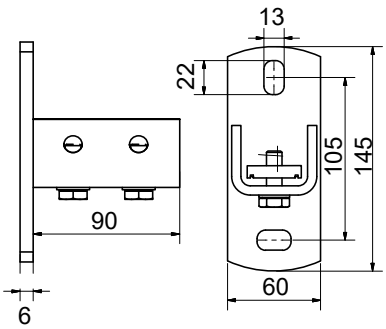

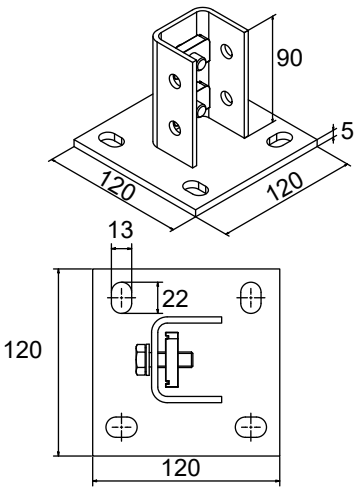

Stable

Articulated

- ☑ material: steel
- ☑ galvanized
- ☑ can be made with turned base
- ☑ all with pre-assembled nut

SOLIDA

FASTENING SYSTEMS

FASTENING ACCESSORIES

pp: 32. - 46.

ACCESSORIES

pp: 47. - 57.

CZECH MANUFACTURER OF FASTENING SYSTEMS
www.solidacz.com

COMBI SCREW

Ord. Code	Thread	L (mm)	La/Lb (mm)	Package in pcs
321006050	M6	50	25/20	100
321006060	M6	60	30/25	100
321006070	M6	70	35/30	100
321006080	M6	80	40/30	100
321006100	M6	100	50/50	100
321006120	M6	120	50/50	100
321008050	M8 / Torx	50	25/16	100
321008060	M8 / Torx	60	28/21	100
321008070	M8 / Torx	70	36/30	100
321008080	M8 / Torx	80	37/30	100
321008100	M8 / Torx	100	45/40	100
321008120	M8 / Torx	120	47/50	100
321008140	M8 / Torx	140	47/50	100
321008160	M8 / Torx	160	47/50	100
321008180	M8 / Torx	180	60/50	100
321010060	M10 / Torx	60	30/20	100
321010080	M10 / Torx	80	40/30	100
321010100	M10 / Torx	100	57/30	100
321010120	M10 / Torx	120	57/40	100
321010140	M10 / Torx	140	57/40	50
321012140	M12 / Torx	140	57/40	25
321012180	M12 / Torx	180	57/45	25

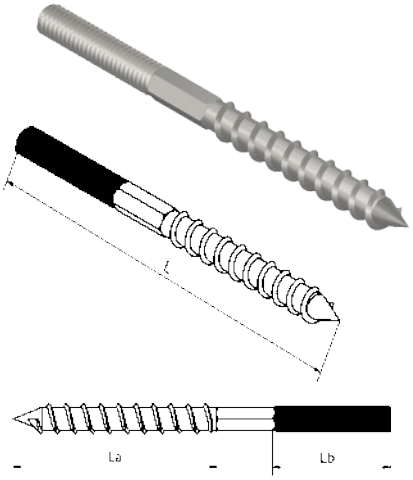

- ☑ material: steel
- ☑ galvanized

ROOFING SHEET HANGER

Ord. Code	M / Ø D (mm)	Allowable load (N)	S x t (mm)	Package in pcs
322000008	M8 regulating	1300	25 x 2	100
322000010	M10 regulating	1300	25 x 2	100
322010008	M8 fixed	1300	25 x 2	100
322010010	M10 fixed	1300	25 x 2	100
322010013	13	1300	25 x 2	100
322030025	8 with damper	1300	25 x 2	100

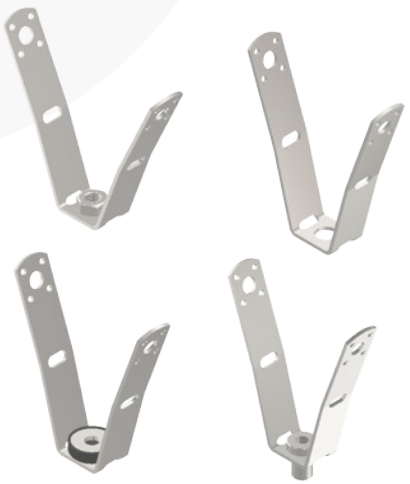

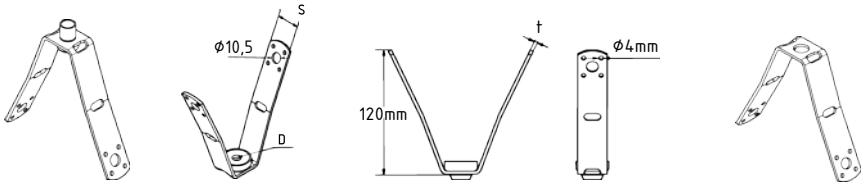

- ☑ material: steel
- ☑ galvanized

HINGE PIN FOR ROOFING SHEET HANGER

Ord. Code	Dimensions (mm)	Package in pcs
322038120	M8x120	100

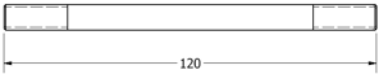

- ☑ material: steel
- ☑ galvanized

HAND PLIER TO TRAPEZOIDAL SHEETS

Ord. Code	TYPE	Package in pcs
322100006	Hand plier to trapezoidal sheets	1
322200014	Spare tips for hand plier	1 pair

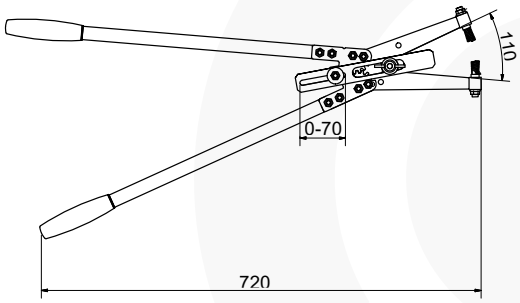

- ☑ material: steel
- ☑ galvanized
- ☑ max. opening between points 110 mm
- ☑ trapezoidal sheets max. strength 1,2 mm

BEAM CLAMP

Ord. Code	M / Ø D (mm)	L (mm)	Max. load (N)	Package in pcs
321700102	M8 low load	0 – 18	1200	50
321700103	M8	0 – 23	2500	50
321700010	M10	0 – 20	2500	50
321700012	M12	0 – 26	3500	50
		Safety strap		
321700108	12,5			50

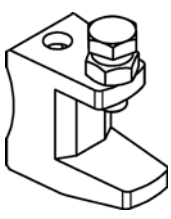

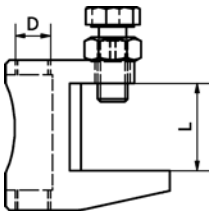

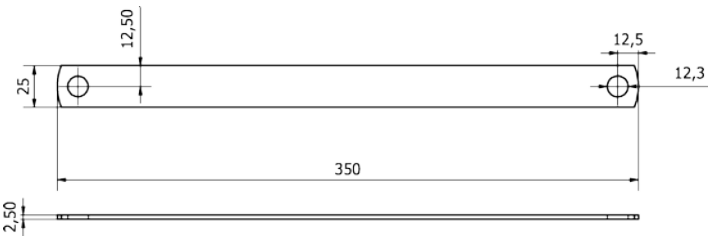

- ☑ material: steel / tempered cast iron
- ☑ galvanized

info@solida.cz +420 465 531 059 www.solidacz.com

SUPPORT CHANNEL

Ord. Code	Ø D (mm)	L (mm)	Material (mm)	Package in pcs
377200120	20	2000	0,55	10
377200125	25	2000	0,55	10
377200132	32	2000	0,55	10
377200140	40	2000	0,55	10
377200150	50	2000	0,55	10
377200163	63	2000	0,55	10
377200175	75	2000	0,55	10
377200190	90	2000	0,55	10

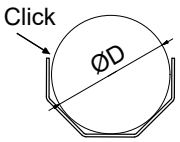

- ☑ fasten by click
- ☑ material: steel
- ☑ galvanized

CUTTING DISC

Ord. Code	TYPE	Package in pcs
394100113	115x1,0 - TOP INOX	1
394100115	115x1,6 - TOP INOX	1
394100122	125x1,0 - TOP INOX	1
394100123	125x1,6 - TOP INOX	1
394100148	150x1,6 - TOP INOX	1
394101181	180x3,0 - TOP INOX	1
394101228	230x1,9 - TOP INOX	1

MOUNTING TOOL FOR STUD SCREWS

Ord. Code	Thread	Length (mm)	Package in pcs
322300808	M8	125	1
322300810	M10	125	1

- ☑ material: steel
- ☑ galvanized

PERFORATED FIXING BAND

Ord. Code	Length (m)	Hole diameter (mm)	Material thickness (mm)	Package in pcs
321800012	10	5	12	10
321800017	10	6,5	17	10
321800026	10	8,2	26	10

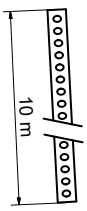

- ☑ material: steel
- ☑ galvanized

THREADED ROD

- ☑ material: steel
- ☑ galvanized
- ☑ quality class 4.8

Ord. Code	M	Length L (mm)	Package in pcs
322038121	M6	1000	100
322038223	M8	1000	50
322038125	M8	2000	25
322440803	M8	3000	25
322038224	M10	1000	25
322038126	M10	2000	25
322441003	M10	3000	25
322121000	M12	1000	20
322038127	M12	2000	20
322441203	M12	3000	20
322121014	M14	1000	10
322038128	M14	2000	10
322441403	M14	3000	10
322121016	M16	1000	10
322038129	M16	2000	10
322441603	M16	3000	10
322121020	M20	1000	5

STUD BOLT

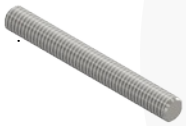

- ☑ material: steel
- ☑ galvanized
- ☑ quality class 4.8

Ord. Code	M	Length L (mm)	Package in pcs
323008025	M8	25	100
323008035	M8	35	100
323008040	M8	40	100
323008050	M8	50	100
323008055	M8	55	100
323008060	M8	60	100
323008070	M8	70	100
323008080	M8	80	100
323008090	M8	90	100
323008100	M8	100	100
323008150	M8	150	50
323008200	M8	200	50
323010025	M10	25	100
323010040	M10	40	100
323010060	M10	60	100
323010080	M10	80	100
323010100	M10	100	100
323010120	M10	120	50
323010150	M10	150	50
323010200	M10	200	50

THREADED PIPE

- ☑ material: steel
- ☑ galvanized

Ord. Code	Length L (mm)	Thread	Package in pcs
322038133	2000	1/2"	10
322038132	2000	3/4"	10
322038131	2000	1"	10

info@solida.cz +420 465 531 059 www.solidacz.com

CONNECTING NUTS - ROUND

Ord. Code	M	Nut length L (mm)	Wrench SW (mm)	Package in pcs
324061018	M6	18	10	100
324081324	M8	24	13	100
324081330	M8	30	13	100
324101320	M10	25	13	100
324101730	M10	30	17	50
324121936	M12	36	19	50
324162448	M16	48	24	50
324203060	M20	60	30	20

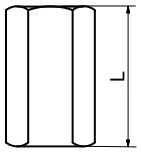

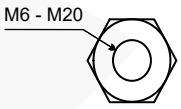

- ☑ material: steel
- ☑ galvanized

REDUCING NUT

Ord. Code	Inner / Outer Thread	Nut length L (mm)	Package in pcs
325000608	M6 / M8	19	10
325000806	M8 / M6	20	10
325104810	M8 / M10	23	10
325104812	M8 / M12	23	10
325001008	M10 / M8	21	10
325001012	M10 / M12	21	10
325001208	M12 / M 8	23	10
325001210	M12 / M10	23	10
325001216	M12 / M16	–	10
325001610	M16 / M10	–	10
326104810	M8 / M10 both internal	–	10

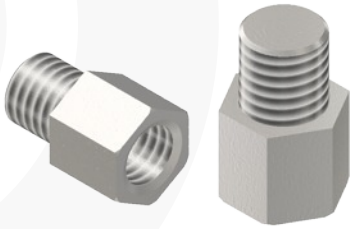

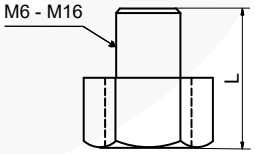

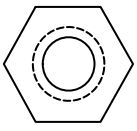

- ☑ material: steel
- ☑ galvanized

HEXAGON NYLON LOCK NUT

Ord. Code	M	Wrench SW (mm)	Package in pcs
331401006	M 6	10	100
331401008	M 8	13	100
331402010	M10	17	100
331402012	M12	19	100

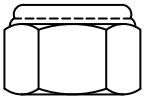

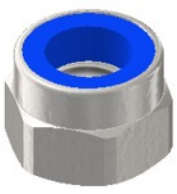

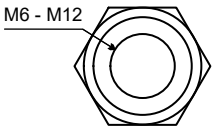

- ☑ material: steel
- ☑ galvanized

NUT

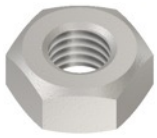

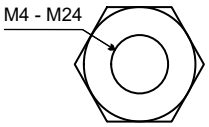

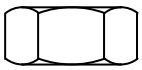

- ☑ material: steel
- ☑ galvanized

Ord. Code	M	Package in pcs
331400004	M4	100
331400005	M5	100
331400006	M6	100
331400008	M8	100
331400010	M10	100
331400012	M12	50
331400014	M14	50
331400016	M16	50
331400020	M20	25
331400024	M24	25

FLANGE NUT

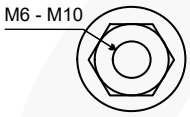

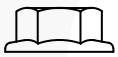

- ☑ material: steel
- ☑ galvanized

Ord. Code	M	Package in pcs
331401066	M6	100
331424068	M8	100
331401016	M10	100

SUSPENSION EYE (FEMALE THREADED)

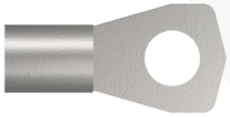

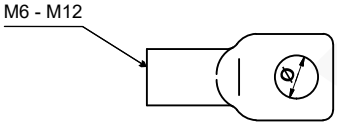

- ☑ material: steel
- ☑ galvanized
- ☑ max. load at center tensile strength 4 kN

Ord. Code	M	Eye Ø (mm)	Package in pcs
321200006	M6	6,5	100
321200008	M8	8,5	100
321200010	M10	10,5	100
321200012	M12	12,5	100

SUSPENSION EYE (MALE THREADED)

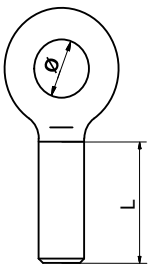

- ☑ material: steel
- ☑ galvanized

Ord. Code	M	Eye Ø (mm)	Length (mm)	Max. load (kN)	Package in pcs
321100825	M 8	8,5	25	5	100
321101025	M10	10,5	25	8	100

info@solida.cz +420 465 531 059 www.solidacz.com

METRIC BOLT DIN 933

Ord. Code	M	Length L (mm)	DIN	Package in pcs
385606015	M6	20	7985	
385606016	M6	16	933	100
385606020	M6	20	933	100
385606030	M6	30	933	100
385606040	M6	40	933	100
385608010	M8	10	933	100
385608014	M8	14	933	100
385608016	M8	16	933	100
385608020	M8	20	933	100
385608025	M8	25	933	100
385608030	M8	30	933	100
385608040	M8	40	933	100
385608045	M8	45	933	100
385608050	M8	50	933	100
385608055	M8	55	933	100
385608070	M8	70	933	100
385608090	M8	90	933	100
385608100	M8	100	933	100
385608110	M8	110	933	100
385610020	M10	20	933	200
385610025	M10	25	933	100
385610030	M10	30	933	100
385610040	M10	40	933	100
385610050	M10	50	933	100
385610060	M10	60	933	100
385610070	M10	70	933	100
385610080	M10	80	933	50
385610100	M10	100	933	75
385610110	M10	110	933	75
385612020	M12	20	933	100
385612030	M12	30	933	50
385612040	M12	40	933	50

Ord. Code	M	Length L (mm)	DIN	Package in pcs
385612050	M12	50	933	50
385612055	M12	55	933	50
385612060	M12	60	933	50
385612070	M12	70	933	50
385612080	M12	80	933	50
385612081	M12	80	931	50
385616050	M16	50	933	25
385616055	M16	55	933	25
385616060	M16	60	933	20
385616065	M16	65	933	30
385616066	M16	65	931	30
385616070	M16	70	933	30
385616075	M16	75	933	30
385616080	M16	80	933	30
385616090	M16	90	933	30
385616100	M16	100	933	25
385616111	M16	110	931	20
385616120	M16	120	933	20
385616121	M16	120	931	20
385616131	M16	130	931	20
385616141	M16	140	931	20
385620070	M20	70	933	20
385620100	M20	100	931	10
385620121	M20	120	931	10
385620131	M20	130	931	1
385620140	M20	140	933	1
385620141	M20	140	931	1
385620151	M20	150	931	1
385624080	M24	80	933	1
385624091	M24	90	931	1
385624121	M24	120	931	1
385624150	M24	150	931	1

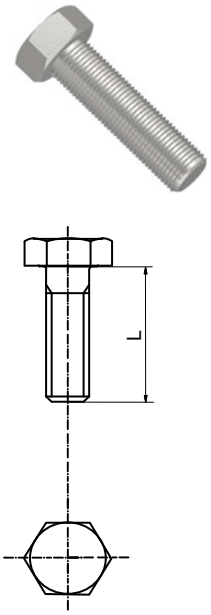

- ☑ material: steel
- ☑ galvanized

SELF-DRILLING SCREW WITH COUNTERSUNK HEAD (TEX) DIN 7504

Ord. Code	Screw	Length L (mm)	DIN	Package in pcs
388535022	3,5	22	7504	200
388539016	3,9	16	7504	200
388539022	3,9	22	7504	200
388542019	4,2	19	7504	200
388542025	4,2	25	7504	200
388548019	4,8	19	7504	200
388548025	4,8	25	7504	200

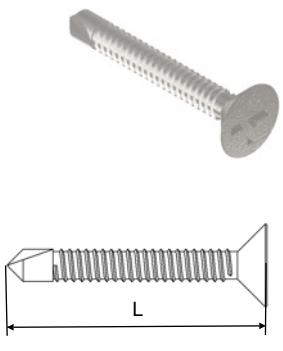

- ☑ material: steel
- ☑ galvanized

SELF-DRILLING SCREW WITH PAN HEAD (TEX) DIN 7504 - N (PHILIPS)

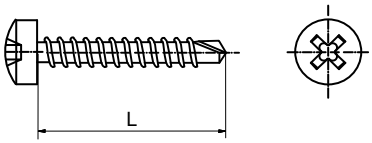

- ☑ material: steel
- ☑ galvanized

Ord. Code	Screw	Length L (mm)	DIN	Package in pcs
388735009	3,5	9,5	7504	200
385601013	3,5	13	7504	200
385601016	3,5	16	7504	200
385601019	3,5	19	7504	200
385601025	3,5	25	7504	200
385601313	3,9	13	7504	200
385601319	3,9	19	7504	200
385601325	3,9	25	7504	200
385601413	4,2	13	7504	200
385601416	4,2	16	7504	200
385601419	4,2	19	7504	200
385601425	4,2	25	7504	200
385601432	4,2	32	7504	200
385601513	4,8	13	7504	200
385601516	4,8	16	7504	200
385601519	4,8	19	7504	200
385601522	4,8	22	7504	200
385601525	4,8	25	7504	200
385601532	4,8	32	7504	200

SELF-DRILLING SCREW WITH HEXAGON HEAD (TEX) DIN 7504-K

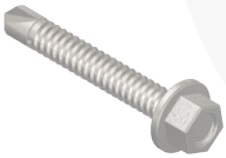

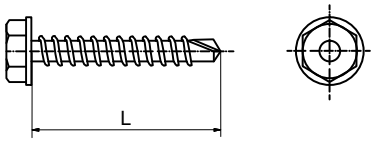

- ☑ material: steel
- ☑ galvanized

Ord. Code	Screw	Length L (mm)	DIN	Package in pcs
385600016	3,9	16	7504	200
385600019	3,9	19	7504	200
385600022	3,9	22	7504	200
385600025	3,9	25	7504	200
385600413	4,2	13	7504	200
388842016	4,2	16	7504	200
385600419	4,2	19	7504	200
385600422	4,2	22	7504	200
385600425	4,2	25	7504	200
385600432	4,2	32	7504	200
385600438	4,2	38	7504	200
385600519	4,8	19	7504	200
385600522	4,8	22	7504	200
385600525	4,8	25	7504	200
385600532	4,8	32	7504	200
385600538	4,8	38	7504	200
385600545	4,8	45	7504	200
385655022	5,5	22	7504	200
385655038	5,5	38	7504	200
385663025	6,3	25	7504	200
385663032	6,3	32	7504	200
385663038	6,3	38	7504	200
385663045	6,3	45	7504	200
385663050	6,3	50	7504	200

info@solida.cz +420 465 531 059 www.solidacz.com

SELF-DRILLING SCREW (TEX) DIN 7504-V (SQUARE)

Ord. Code	Screw	Length L (mm)	DIN	Package in pcs
385601613	4,2	13	7504	1000
385601616	4,2	16	7504	1000
385601619	4,2	19	7504	1000
385601625	4,2	25	7504	1000

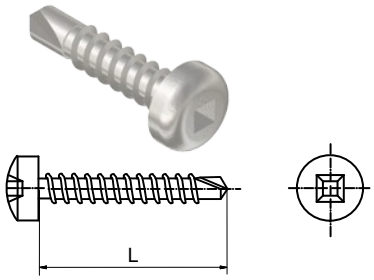

- ☑ material: steel
- ☑ galvanized

TIGHTENING BITS SQUERE, PHILIPS, ADAPTERS

Ord. Code	Type	Package in pcs
385600001	bit SQ2-25 mm	1
385600002	bit PH2-25 mm	1
388890001	Magnetic extension for tightening bits	1
388890002	Magnetic extension for tightening bits WITTE	1
388890003	Magnetic extension for AKU SW7	1
388890004	Magnetic extension for AKU SW8	1

WOOD SCREW - FLUSH HEAD, PHILIPS

Ord. Code	Screw	Length L (mm)	Package in pcs
382130030	3	30	500
382130040	3	40	500
382135020	3,5	20	500
382135025	3,5	25	500
382135030	3,5	30	500
382135035	3,5	35/24	500
382135040	3,5	40	500
382135045	3,5	45/30	500
382135050	3,5	50	500
382140020	4	20	500
382140030	4	30	500
382140040	4	40	500
382140045	4	45	500
382140045	4	45	500
382140050	4	50	500
382140055	4	55	500
382145016	4,5	16	500
382145025	4,5	25	500
382145030	4,5	30	500
382145040	4,5	40	500

Ord. Code	Screw	Length L (mm)	Package in pcs
382145050	4,5	50	500
382145060	4,5	60	200
382145070	4,5	70/42	200
382145080	4,5	80	100
382150025	5	25	500
382150040	5	40	500
382150050	5	50	500
382150060	5	60	200
382150070	5	70	200
382150080	5	80	100
382150100	5	100/60	50
382150120	5	120/70	50
382160040	6	40	500
382160045	6	45	500
382160050	6	50	500
382160060	6	60	200
382160070	6	70	200
382160080	6	80/50	100
382160090	6	90/60	100

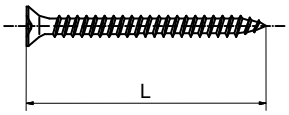

- ☑ material: steel
- ☑ galvanized

WOOD SCREW - HEXAGON HEAD, DIN 571

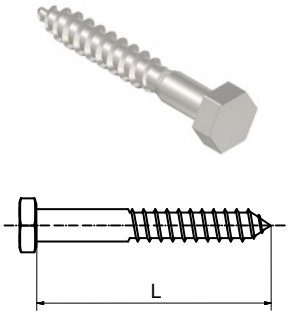

Ord. Code	Screw	Length L (mm)	DIN	Package in pcs
382160004	6	40	571	500
382164005	6	45	571	500
382160005	6	50	571	500
382160006	6	60	571	500
382160007	6	70	571	100
382160008	6	80	571	100
382160100	6	100	571	100
382180040	8	40	571	100
382180045	8	45	571	100
382180050	8	50	571	100
382180060	8	60	571	100
382180070	8	70	571	100
382180090	8	90	571	100
382180100	8	100	571	100
382180120	8	120	571	25
382180140	8	140	571	25
383010060	10	60	571	50
382110070	10	70	571	50
382110080	10	80	571	50
382110090	10	90	571	50
382110100	10	100	571	50
382110120	10	120	571	50
382110130	10	130	571	50
382110140	10	140	571	50

- ☑ material: steel
- ☑ galvanized

WOOD SCREW - HALF-ROUND HEAD - FULL THREAD, PHILIPS

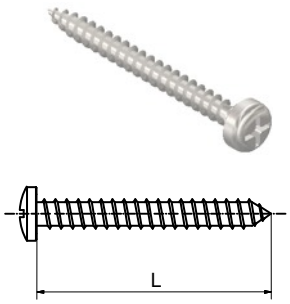

Ord. Code	Screw	Length L (mm)	Package in pcs
382540040	4	40	200
382550050	5	50	200
382550060	5	60	200
382550070	5	70	200
382560040	6	40	200
382560045	6	45	200
382560050	6	50	200
382560060	6	60	200
382560070	6	70	200
382560080	6	80	200

- ☑ material: steel
- ☑ galvanized

info@solida.cz +420 465 531 059 www.solidacz.com

WASHER DIN 125-A

Ord. Code	Inner Ø (mm)	Dimensions D (mm)	DIN	Package in pcs
331300006	6,4	12x1,6	125	100
331300008	8,4	16x1,6	125	100
331300010	10,5	20x2	125	100
331300012	13	24x2,5	125	100
331300017	17	30x3	125	100
331300021	21	37x3	125	100

- ☑ material: steel
- ☑ galvanized

SERRATED WASHER DIN 6798

Ord. Code	M	DIN	Package in pcs
331306006	6	6798	100
331306008	8	6798	100
331306010	10	6798	100
331306012	12	6798	100
331306014	14	6798	100
331306016	16	6798	100
331306020	20	6798	100
331306024	24	6798	100

- ☑ material: steel
- ☑ galvanized

WASHER DIN 440

Ord. Code	M	Dimensions D (mm)	DIN	Package in pcs
331304005	5	18x2	440	100
331304006	6	22x2	440	100
331304008	8	28x3	440	100
331304010	10	34x3	440	100
331304012	12	45x4	440	100
331304014	14	49x4	440	100
331304016	16	58x5	440	100
331304020	20	68x5	440	100

- ☑ material: steel
- ☑ galvanized

SPRING WASHER DIN 7980

- ☑ material: steel
- ☑ galvanized

Ord. Code	M	DIN	Package in pcs
331305006	6	7980	100
331305008	8	7980	100
331305010	10	7980	100
331305012	12	7980	100
331305014	14	7980	100
331305016	16	7980	100
331305020	20	7980	100

WASHER FOR FIXING RAILS

- ☑ material: steel
- ☑ galvanized

Ord. Code	Inner Ø (mm)	Dimensions D (mm)	Package in pcs
331310825	8,5	27 × 2	100
331311025	10,3	27 × 2	100
331311408	8,5	ST 36,2 × 3	100
331311410	10,5	ST 40,0 × 3	100
331311412	12,5	ST 40,0 × 3	100

LARGE WASHER

- ☑ material: steel
- ☑ galvanized

Ord. Code	Inner Ø (mm)	Dimensions D (mm)	Package in pcs
331320430	4,3	20 × 1,25	100
331320431	4,5	30 × 1,5	100
331320520	5,5	30 × 1,5	100
331320622	6,6	22 × 2,0	100
331320630	6,6	30 × 1,5	100
331320830	8,4	30 × 1,5	100
331321035	10,5	30 × 1,5	100
331321224	12,5	30 × 1,5	100

DRILLS SDS

- ☑ other dimensions on request

Ord. Code	M	Total Length (mm)	Working Length (mm)	Package in pcs
392406160	6	160	100	1
392406210	6	210	160	1
392406310	6	310	250	1
392408110	8	110	50	1
392408160	8	160	100	1
392408210	8	210	160	1
392410160	10	160	100	1
392410210	10	210	150	1
392410260	10	260	200	1
392414210	14	210	160	1
392418300	18	300	260	1
392420450	20	450	400	1

info@solida.cz +420 465 531 059 www.solidacz.com

PLASTIC CABLE TIE - ZIP

Ord. Code	TYPE	Package in pcs
319625100	Cable tie 2.5×100 white	100
319625120	Cable tie 2.5×120 white	100
319625160	Cable tie 2.5×160 white	100
319625200	Cable tie 2.5×200 white	100
319635150	Cable tie 3.5×150 white	100
319635200	Cable tie 3.5×200 white	100
319635250	Cable tie 3.5×250 white	100
319635300	Cable tie 3.5×300 white	100
319635370	Cable tie 3.5×370 white	100
319648190	Cable tie 4.8×190 white	100
319648280	Cable tie 4.8×280 white	100
319648380	Cable tie 4.8×380 white	100
319648430	Cable tie 4.8×430 white	100
319725100	Cable tie 2.5×100 černý s UV	100
319725120	Cable tie 2.5×120 black with UV	100
319725160	Cable tie 2.5×160 black with UV	100
319725200	Cable tie 2.5×200 black with UV	100
319735150	Cable tie 3.5×150 black with UV	100
319735200	Cable tie 3.5×200 black with UV	100
319735250	Cable tie 3.5×250 black with UV	100
319735300	Cable tie 3.5×300 black with UV	100
319735370	Cable tie 3.5×370 black with UV	100
319748190	Cable tie 4.8×190 black with UV	100
319748280	Cable tie 4.8×280 black with UV	100
319748380	Cable tie 4.8×380 black with UV	100
319748430	Cable tie 4.8×430 black with UV	100

KNOTTED CHAIN

Ord. Code	TYPE	Load capacity (kg)	Package in m
3R05K2512	d2,2/t31/10 #74448	35	1

- ☑ material: steel
- ☑ galvanized

WELDED CHAIN SHORT LINKED, long LINKED DIN 5685

Ord. Code	TYPE	Load capacity (kg)	Package in m
3R085A002	DIN 5685-A d=2mm galvanized #77003	30	30
3R085A003	DIN 5685-A d=3mm galvanized #89562	70	30
3R085A004	DIN 5685-A d=4mm galvanized #77010	125	30
3R085A005	DIN 5685-A d=5mm galvanized #77013	195	30
3R085A006	DIN 5685-A d=6mm galvanized #77016	290	30
3R085A008	DIN 5685-A d=8mm galvanized #77022	500	30
3R085C002	DIN 5685-C d=2mm galvanized #77025	30	30
3R085C003	DIN 5685-C d=3mm galvanized #77028	70	30
3R085C004	DIN 5685-C d=4mm galvanized #77031	125	30
3R085C005	DIN 5685-C d=5mm galvanized #77034	195	30
3R085C006	DIN 5685-C d=6mm galvanized #77037	290	30
3R085C008	DIN 5685-C d=8mm galvanized #77043	500	30

- ☑ material: steel
- ☑ galvanized

CHAIN LINK RAPID ZINK

- ☑ material: steel
- ☑ galvanized

Ord. Code	TYPE	Package in pcs
3R2000004	4mm RAPID galvanized #42134	10
3R2000005	5mm RAPID galvanized #42135	10
3R2000006	6mm RAPID galvanized #42136	10
3R2000008	8mm RAPID galvanized #42138	10

CARABINE

- ☑ material: steel
- ☑ galvanized

Ord. Code	TYPE	Package in pcs
3R2000550	5x50mm galvanized #42090	50
3R2000551	6x60mm galvanized #42091	50
3R2000552	7x70mm galvanized #42092	50
3R2000553	8x80mm galvanized #42093	50
3R2000554	9x90mm galvanized #42094	25
3R2000555	10x100mm galvanized #42095	25

S-HOOK

- ☑ material: steel
- ☑ galvanized

Ord. Code	TYPE	Package in pcs
3R2001610	1,6mm galvanized #42154	100
3R2002010	2,0mm galvanized #42155	100
3R2003010	3,0mm galvanized #42157	100
3R2004010	4,0mm galvanized #42159	100
3R2005010	5,0mm galvanized #42160	100
3R2006010	6,0mm galvanized #42161	100
3R2007010	7,0mm galvanized #42162	50
3R2008010	8,0mm galvanized #42163	50

EYECUP FOR ROPE

- ☑ material: steel
- ☑ galvanized

Ord. Code	TYPE	Package in pcs
3R2069003	lano pr.3mm galvanized #08861	50
3R2069004	lano pr.4mm galvanized #08892	50
3R2069006	lano pr.6mm galvanized #08886	50
3R2069008	lano pr.8mm galvanized #08890	25

info@solida.cz +420 465 531 059 www.solidacz.com

TENSION SCREWS

Ord. Code	TYPE	Package in pcs
3R2050055	M5x70 galvanized (eye - hook)	50
3R2050069	M6x110 galvanized (eye - hook)	50
3R2050080	M8×110 galvanized (eye - hook)	50
3R2050105	M10x125 galvanized (eye - hook)	50
3R2050057	M5x70 galvanized (eye - eye)	50
3R2050071	M6x110 galvanized (eye - eye)	50
3R2050082	M8x110 galvanized (eye - eye)	50
3R2050106	M10x125 galvanized (eye - eye)	50
3R2051105	M5x70 galvanized (hook - hook)	50
3R2051106	M6x110 galvanized (hook - hook)	50
3R2051108	M8x110 galvanized (hook - hook)	50
3R2051110	M10x125 galvanized (hook - hook)	50

eye - hook

eye - eye

hook - hook

- ☑ material: steel
- ☑ galvanized

ROPE CLIPS

Ord. Code	TYPE	Package in pcs
	Single	
3R2060001	lano max. pr.1,5-3mm galvanized #8858	50
3R2060002	lano max. pr.4-5mm galvanized #8859	50
3R2060003	lano max. pr.6mm galvanized #77909	50
3R2060004	lano max. pr.7-8mm galvanized #8860	25
3R2060005	lano max. pr.9-10mm galvanized #08856	25
3R2060006	lano max. pr.11-13mm galvanized #8857	25
	Double	
3R2065003	lano max. pr.3mm galvanized #89731	1
3R2065004	lano max. pr.4mm galvanized #89733	1
3R2065005	lano max. pr.5mm galvanized #89735	1
3R2065008	lano max. pr.8mm galvanized #89737	1

Single **Double**

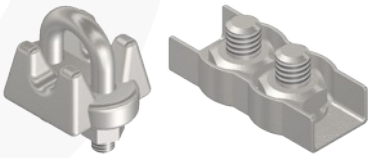

- ☑ material: steel
- ☑ galvanized

STEEL ROPE EN 12385-4

Ord. Code	TYPE	Package in pcs
3R2500000	pr.1,25mm 1x19 1770, MBL = 1 450 N	200
3R2500001	pr.1,5mm 1x19 1770, MBL = 2 100 N	200
3R2500002	pr.2mm 1x19 1770, MBL = 3 700 N	100
3R2500003	pr.3mm 1x19, 1770, MBL = 8 400 N	100
3R2500004	pr.4mm 1x19, 1770, MBL = 14 900 N	100
3R2500005	pr.5mm 1x19 1770, MBL = 23 200 N	100
3R2500007	pr.6mm 6x7-WSC 1770, MBL = 24 720 N	100

- ☑ material: steel
- ☑ galvanized

HAMMERSET ANCHOR

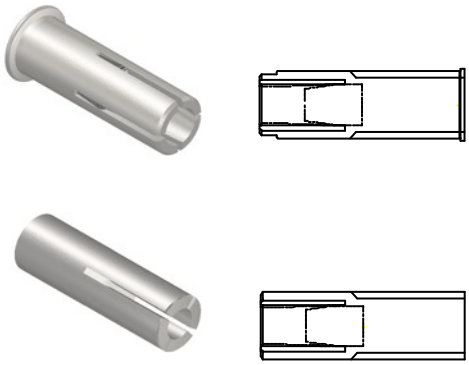

Ord. Code	TYPE	Drill Ø (mm)	Min. Depth of drilled hole (mm)	Package in pcs
380501009	M8 with collar	10	32	100
380510840	M8 x 40 with collar	10	42	50
380501011	M10 with collar	12	42	50
380501013	M12 with collar	15	53	25
380501006	M6 without collar	8	30	100
380501008	M8 without collar	10	30	100
380501010	M10 without collar	12	42	100
380501012	M12 without collar	15	53	50
380510016	M16 without collar	20	70	50

- ☑ material: steel
- ☑ galvanized
- ☑ Suitable for Concrete B15
- ☑ Natural stone with integral structure

BRASS FIXING ANCHOR

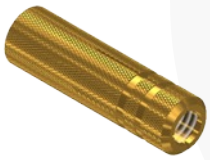

- ☑ material: brass
- ☑ suitable for concrete pre-stressed concrete slabs with hollow core
- ☑ natural stone with a dense structure
- ☑ full bricks
- ☑ full lime-sand bricks

Ord. Code	TYPE	Drill Ø (mm)	Min. Depth of drilled hole (mm)	Package in pcs
380512005	M5	6	25	100
380512006	M6	8	28	100
380512008	M8	10	35	100
380512010	M10	12	40	100
380512012	M12	15	45	50
380512016	M16	18	60	25

SETTING TOOL FOR ANCHORS

- ☑ material: steel, black steel
- ☑ galvanized

Ord. Code	TYPE	Package in pcs
380501106	for anchors M6	1
380501109	for anchors M8	1
380501110	for anchors M10	1
380501112	for anchors M12	1
380530016	for anchors M16	1

info@solida.cz +420 465 531 059 www.solidacz.com

BOLT ANCHOR

Ord. Code	d (mm)	h1 (mm)	L (mm)	Tfix (mm)	T (Nm)	M	Fa,z (kN)	Fa,x (kN)	hef (mm)	Package in pcs
380700645	6	40	45	3	6	M6	2,4	1,4	30	100
380700655	6	45	55	10	6	M6	2,4	1,4	40	100
380700665	6	50	65	15	6	M6	2,4	1,4	40	100
380700685	6	50	85	35	6	M6	2,4	1,4	40	100
380700804	8	50	50	5	15	M8	3,4	2,8	45	50
380700805	8	60	60	10	15	M8	3,4	2,8	45	50
380700810	8	60	75	15	15	M8	3,4	2,8	45	50
380700830	8	60	90	30	15	M8	3,4	2,8	45	50
380700850	8	60	115	55	15	M8	3,4	2,8	45	50
380700899	8	60	165	105	15	M8	3,4	2,8	45	50
380701005	10	50	70	5	25	M10	5,6	4,6	50	50
380701015	10	70	90	20	25	M10	5,6	4,6	50	50
380701035	10	70	110	30	25	M10	5,6	4,6	50	50
380701050	10	70	125	50	25	M10	5,6	4,6	50	50
380701070	10	70	145	75	25	M10	5,6	4,6	50	50
380701100	10	70	175	100	25	M10	5,6	4,6	50	50
380710140	10	70	215	140	25	M10	5,6	4,6	50	50
380712083	12	70	85	7	50	M12	8,5	6,7	65	25
380712113	12	85	115	20	50	M12	8,5	6,7	65	25
380712128	12	85	130	40	50	M12	8,5	6,7	65	25
380712143	12	85	145	45	50	M12	8,5	6,7	65	25
380712179	12	85	180	100	50	M12	8,5	6,7	65	25
380712202	12	85	200	115	50	M12	8,5	6,7	65	25
380716100	16	90	100	15	100	M16	10,2	10,8	80	20
380716125	16	115	125	10	100	M16	10,2	10,8	80	20
380716145	16	115	145	30	100	M16	10,2	10,8	80	20

- ☑ d - drill diameter
- ☑ h1 - hole depth
- ☑ L - total length of the anchor
- ☑ Tfix - max. Thickness of anchored material
- ☑ T - tightening torque
- ☑ Fa,z - recommended tensile load (concrete)
- ☑ Fa,x - recommended shearing loads (concrete)
- ☑ hef - min. depth of hole for anchoring

- ☑ material: steel
- ☑ galvanized
- ☑ pressed concrete C20/25 to C50/60

SCREW FOR CONCRETE

Ord. Code	TYPE	Package in pcs
385690010	Self-tapping screw for concrete 6x35 screw M8x19	1
385690011	Self-tapping screw for concrete 6x55 screw M8x19	1
38569012	Self-tapping screw for concrete 6x55 screw M8/M10	1
385690013	Self-tapping screw for concrete 6x35 screw M8/M10	1

- ☑ material: steel
- ☑ galvanized
- ☑ concrete C12/15
- ☑ mansory with a dense structure
- ☑ full building materials

PLUGS

Ord. Code	TYPE	Drill Ø (mm)	Min. Depth of drilled hole (mm)	Package in pcs
380100006	Wall plug NYLON 6	6	38	100
380100008	Wall plug NYLON 8	8	50	100
380100010	Wall plug NYLON 10	10	62	100
380100012	Wall plug NYLON 12	12	72	100
380100014	Wall plug NYLON 14	14	86	50

- ☑ material: PA-Nylon
- ☑ suitable for full building materials
- ☑ concrete, solid bricks, solid lime sand bricks, solid aerated concrete blocks, hollow concrete blocks, etc.

Ord. Code	TYPE	Drill Ø (mm)	Min. Depth of drilled hole (mm)	Package in pcs
381205030	Wall plug NYLON UX 5X30	5	40	100
381206035	Wall plug NYLON UX 6X35	6	45	100
381208050	Wall plug NYLON UX 8X50	8	60	100
381210060	Wall plug NYLON UX 10X60	10	75	100
381212070	Wall plug NYLON UX 12X70	12	85	100
381214075	Wall plug NYLON UX 5X30	14	95	100

- ☑ material: PA-Nylon
- ☑ product of fischer
- ☑ nylon dowel for all building materials
- ☑ ideal hollow materials

Ord. Code	TYPE	Drill Ø (mm)	Min. Depth of drilled hole (mm)	Package in pcs
380200106	Wall plug TX-PA 6	6	38	100
380200108	Wall plug TX-PA 8	8	50	100
380200110	Wall plug TX-PA 10	10	62	100
380200112	Wall plug TX-PA 12	12	72	100

- ☑ material: PA-Nylon
- ☑ suitable for solid and hollow building materials

Ord. Code	TYPE	Drill Ø (mm)	Min. Depth of drilled hole (mm)	Package in pcs
380120006	Wall plug 6 mm (black set 10 pcs)	6	38	10
380120008	Wall plug 8 mm (black set 10 pcs)	8	50	10
380120010	Wall plug 10 mm (black set 10 pcs)	10	62	10
380120012	Wall plug 12 mm (black set 10 pcs)	12	72	10
380120014	Wall plug 14 mm (black set 10 pcs)	14	86	10

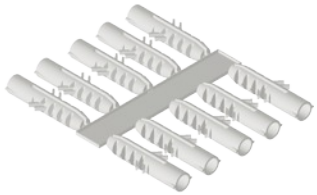

Ord. Code	TYPE	Drill Ø (mm)	Min. Depth of drilled hole (mm)	Package in pcs
380900006	Wall plug 6 mm (white set 10 pcs)	6	38	10
380900008	Wall plug 8 mm (white set 10 pcs)	8	50	10
380900010	Wall plug 10 mm (white set 10 pcs)	10	62	10
380900012	Wall plug 12 mm (white set 10 pcs)	12	72	10

- ☑ material: PE - LITEN
- ☑ suitable for full building materials

info@solida.cz +420 465 531 059 www.solidacz.com

PLUGS

Ord. Code	TYPE	Drill Ø (mm)	Plug length (mm)	Package in pcs
380190106	Wall plug 6 mm (square)	6	30	100
380190108	Wall plug 8 mm (square)	8	40	100
380190110	Wall plug 10 mm (square)	10	50	100
380190112	Wall plug 12 mm (square)	12	60	100

- ☑ material: PA-Nylon
- ☑ suitable for full building materials

Ord. Code	TYPE	Drill Ø (mm)	Min. depth of drill hole on fixture object (mm)	Package in pcs
383010640	Wall plug knockin 6x40 FZM6	6	50	100
380446105	Wall plug knockin 6x50 M6	6	60	100

- ☑ material: PA-Nylon

Ord. Code	TYPE	Drill Ø (mm)	Min. depth of drill hole on fixture object (mm)	Package in pcs
380410540	Wall plug knockin 5x40 embed	5	50	100
380410550	Wall plug knockin 5x50 embed	5	60	100
380410635	Wall plug knockin 6x35 embed	6	45	100
380410640	Wall plug knockin 6x40 embed	6	50	100
380410650	Wall plug knockin 6x50 embed	6	60	100
380410660	Wall plug knockin 6x60 embed	6	70	100
380410680	Wall plug knockin 6x80 embed	6	90	100
380410860	Wall plug knockin 8x60 embed	8	70	100
380410880	Wall plug knockin 8x80 embed	8	90	100
380418100	Wall plug knockin 8x100 embed	8	110	100

- ☑ material: PA-Nylon
- ☑ concrete,
- ☑ solid burnt brick
- ☑ natural stone
- ☑ solid lightweight concrete bricks
- ☑ plasterboard

Ord. Code	TYPE	Drill Ø (mm)	Plug length (mm)	Package in pcs
380480613	Metal cavity fixing wall plug M6/dia.10 6x(7-15)/37mm	13	37	100
380480616	Metal cavity fixing wall plug M6/dia.10 6x(10-21)/50mm	13	50	100
380480624	Metal cavity fixing wall plug M6/dia.10 6x(20-34)/65mm	13	65	100
380480638	Metal cavity fixing wall plug M6/dia.10 6x(38-50)/80mm	13	80	100
380480816	Metal cavity fixing wall plug M8/dia.12 8x(10-21)/55mm *	13	55	100
380480832	Metal cavity fixing wall plug M8/dia.12 8x(25-34)/65mm *	13	65	100

- ☑ material: steel
- ☑ * with hexagon metric bolt
- ☑ all board materials

PLUGS

Ord. Code	TYPE	Screw Ø (mm)	Plug length (mm)	Package in pcs
380600632	Wall plug steel 6×32	5-6	32	100
380600838	Wall plug steel 8×38	6-8	38	100
380600860	Wall plug steel 8×60	6-8	60	50
380601060	Wall plug steel 10×60	8-10	60	50

- ☑ material: steel
- ☑ galvanized
- ☑ use for Ytong type materials

Ord. Code	TYPE	Dimensions (mm)	Screw Ø (mm)	Package in pcs
383010350	Wall plug, plasteboard fixing, nylon	10x35	3,5-4	100
383010351	Turbo Wall plug metal, zinc alloy	10x35	3,5-4	100

- ☑ material: nylon / zinc alloy
- ☑ plasterboards

Ord. Code	TYPE	Drill Ø (mm)	Max. length (mm)	Package in pcs
383010544	Spring toggle with hook M4	14	M4x80	25
383010545	Spring toggle with hook M5	16	M5x90	25
383010646	Spring toggle with hook M6	16	M6x100	25
383010547	Spring toggle wih eye M4	14	M4x80	25
383010548	Spring toggle wih eye M5	16	M5x90	25
383010549	Spring toggle wih eye M6	16	M6x100	10
383010550	Spring toggle with screw M4	14	M4x100	25
383010551	Spring toggle with screw M5	16	M5x90	25
383010552	Spring toggle with screw M6	16	M6x100	25
381081001	Spring toggle (with spring) steel M8 x 100 Thread.rod	20	M8x100	1
381081002	Hinged Wall plug (with arm) steel M8 x 100 with hook	20	M8x100	1
381081004	Gravity toggle (with arm) steel M8 x 100 Thread.rod	20	M8x100	1
381081010	Gravity toggle (with arm) steel M10 Thread.rod	30	M10x180	1

- ☑ material: steel
- ☑ galvanized
- ☑ fixing into the cavities of plate materials

info@solida.cz +420 465 531 059 www.solidacz.com

SPACERS FOR GASOMETER

Ord. Code	TYPE	Range L (mm)	U-bolt inner Ø (mm)	For pipes	Package in pcs
350125001	Flat spacer 1" 250 long	100-150-200	42		25
350125054	Flat spacer 5/4" 250 long	100-150-200	52		25
350210001	Flat spacer 1" 100 short	100	42		50
350210054	Flat spacer 5/4" 100 short	100	52		50
350324001	Adjustable spacer 1" long	200 - 240		1"	25
350324054	Adjustable spacer 5/4" long	200 - 240		5/4"	25
350410001	Adjustable spacer 1" short	85 - 105		1"	50
350410054	Adjustable spacer 5/4" short	85 - 105		5/4"	50

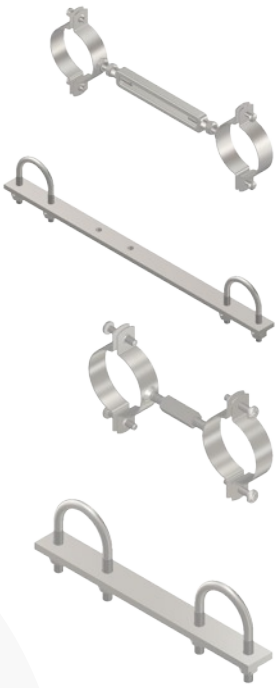

Adjustable spacer long

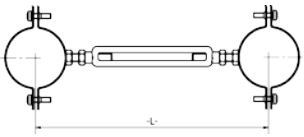

Flat spacer long

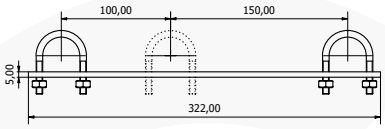

Adjustable spacer short

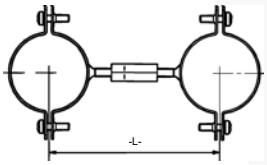

Flat spacer short

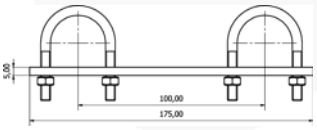

- ☑ material: steel
- ☑ galvanized

STABILIZING SPACER FOR GASOMETER

Ord. Code	TYPE	Pitch (mm)	For pipes	Package in pcs
350500001	For gas-meter 3-Threaded	250	1"	8
350500002	For gas-meter 4-Threaded	250	1"	8

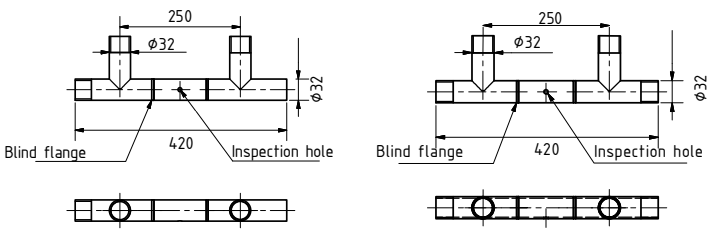

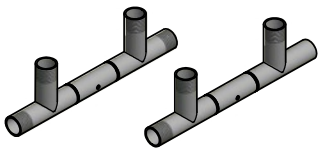

- ☑ material: steel
- ☑ without surface treatment

WC AND BIDET FIXING KIT

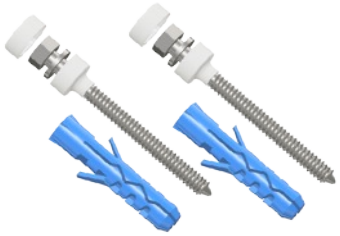

Ord. Code	TYPE	Screw dimensions (mm)	Package (set) in pcs
360167015	WC and bidet fixing kit 6x70 white	6x70	100
360168015	WC and bidet fixing kit 6x80 white	6x80	100

- ☑ material: steel
- ☑ galvanized
- ☑ wall plug: PA 6 - nylon color blue, black

Kit contains:
2x screw with hexagon head
2x Wall plug nylon
2x u-washer
2x screw cap
1x plastic bag

URINAL, WC AND WALL BIDET FIXING KIT

Ord. Code	TYPE	Screw dimensions (mm)	Package (set) in pcs
360310120	Urinal and bidet fixing kit M10×120 white	M10x120	100
360310140	Urinal and bidet fixing kit M10×140 white	M10x140	100

- ☑ material: steel
- ☑ galvanized
- ☑ wall plug: PA 6 - nylon color blue, black

Kit contains:
2x stud screw
2x wall plug NYLON
2x plastic washer
2x plastic cap
2x nut M10
2x steel washer DIN 125
1x plastic bag

WASH BASIN FIXING KIT

Ord. Code	TYPE	Screw dimensions (mm)	Package (set) in pcs
360208120	Wash basin fixing kit 8x120	M8x120	100
360210122	Wash basin fixing kit 10x120	M10x120	100
360210140	Wash basin fixing kit 10x140	M10x140	100

- ☑ material: steel
- ☑ galvanized
- ☑ wall plug: PA 6 - nylon color blue, black

Kit contains:
2x stud screw
2x wall plug NYLON
2x plastic washer
2x nut M10 (M8)
2x steel washer DIN 125
1x plastic bag

info@solida.cz +420 465 531 059 www.solidacz.com

BOILER FIXING KIT

Ord. Code	TYPE	Screw dimensions (mm)	Package (set) in pcs
360712140	Boiler fixing kit M12×140 D14 NY	M12x140	50
360712180	Boiler fixing kit M12×180 with long wall plug 16×140	M12x180	50

Kit contains:

2x stud screw
2x wall plug NYLON
2x nut M12
2x large steel washer
1x plastic bag

- ☑ material: steel
- ☑ galvanized
- ☑ wall plug: PA 6 - nylon color blue, black

WASH BASIN AND BOILER „TROUGH THE WALL“ FIXING KIT

Ord. Code	TYPE	Screw dimensions (mm)	Package (set) in pcs
360408120	Wash basin "through the wall" fixing kit M8×120 (plastic washer)	M8x120	50
360410120	Wash basin "through the wall" fixing kit M10×120 (plastic washer)	M10x120	50
360508120	Boiler "through the wall" fixing kit M8×120	M8x120	50
360510120	Boiler "through the wall" fixing kit M10×120	M10x120	50

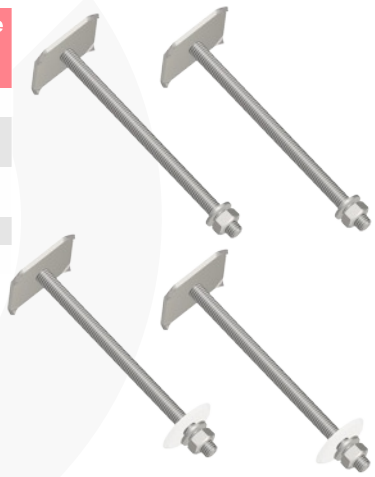

Wash basin kit contains:

2x assembly jig for fixing through the wall (M8 or M10)
2x nut M8 or M10
2x plastic washer
2x steel washer
1x plastic bag

Boiler kit contains:

2x assembly jig for fixing through the wall
2x nut M10, M8
2x steel washer
1x plastic bag

- ☑ material: steel
- ☑ galvanized

CANTILEVER ARM SET

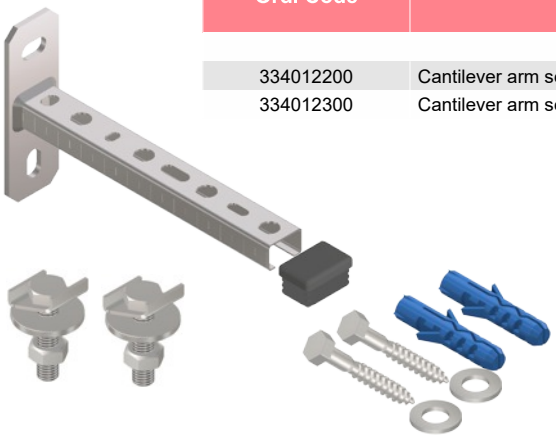

Ord. Code	TYPE	Package in pcs
334012200	Cantilever arm set 27/18 × 200, D10 NY	1
334012300	Cantilever arm set 27/18 × 300, D10 NY	1

- ☑ material: steel
- ☑ galvanized

Kit contains:
1x can. arm 27/18 200 mm
2x slide teebolt assembly 27/1828/30 M8x50mm
2x screw DIN 571 8x60
2x steel washer DIN 125A
2x wall plug NYLON
1x cap 27/18
1x plastic bag

Kit contains:
1x can. arm 27/18 300 mm
3x slide teebolt assembly 27/1828/30 M8x50mm

2x screw DIN 571 8x60
2x steel washer DIN 125A
2x wall plug NYLON
1x cap 27/18
1x plastic bag

EXPANSION TANK FIXING KIT

Ord. Code	TYPE	Package in pcs
399040003	Expansion tank fixing kit with hose clamp W1 50570 mm PA blue	1
390050570	Maxi hose clamp W1 50570 mm galvanized (exp. tank)	1
399040050	Expansion tank holder with rubber damper	1
	Expansion tank holder extendable	
399040051	Expansion tank holder extendable 3/4"+ accessories	1
399040052	Expansion tank holder extendable 1" + accessories	1

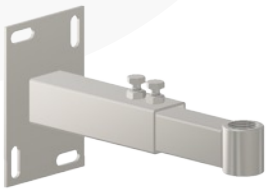

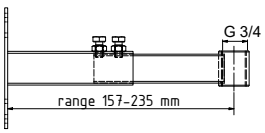

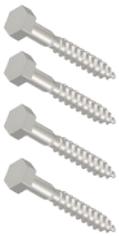

Kit contains:
1x expansion tank holder with s damper
1x maxi hose clamp W2 50-570 mm - V2A
4x wall plug nylon
4x screw DIN 571 - 6 × 60
4x washer DIN 440 - 6,6 x22 mm

Load capacity:
max. 70 kg

Expansion tank holder extendable contains:
1x expansion tank holder
4x wall plug nylon
4x screw DIN 571 - 6 × 60
4x washer DIN 440 - 6,6 x22 mm

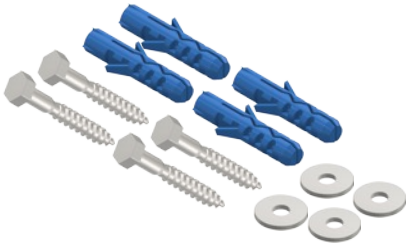

- ☑ material: steel
- ☑ galvanized
- ☑ Expansion tank holder extendable
  for tanks 4-35 l
  socket 3/4" and 1"
  max. load capacity 70 kg

info@solida.cz +420 465 531 059 www.solidacz.com

CHEMICAL MORTAR

Ord. Code	TYPE	Package in pcs
381650301	Chem.mortar methacrylate high performance 380ml.	1
381650300	Chem.mortar methacrylate high performance 280ml.	1
381660000	Mixing noozle for chemical mortar MN1	1

PLASTIC STRAINER FOR CHEMICAL ANCHOR

Ord. Code	Outer Ø (mm)	Length (mm)	Suitable for M	Package in pcs
381611050	10	50	M6	10
381611250	12	50	M8	6
381611380	15	80	M8 / M10	6
381611390	16	130	M8 / M10 / M12	4
381611685	16	85	M8 / M10 / M12	1
381611885	20	85	M12 / M14 / M16	1

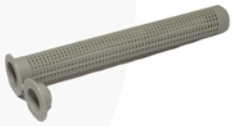

INJECTION GUN

Ord. Code	TYPE	Package in pcs
381650305	Injection gun for chem. mortar 380 ml (Profi)	1
381650304	Injection gun for chem. mortar 280 ml	1

ASSEMBLY JIG FOR FIXING TROUGH THE WALL

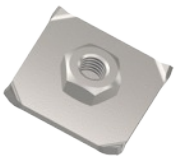

Ord. Code	TYPE	Dimensions screw - nut	Wall plate size (mm)	Package in pcs
360710121	Assembly jig for fixing through the wall M8 × 120	M8x120	40x40x2,5	50
360710122	Assembly jig for fixing through the wall M10 × 120	M10x120	40x40x2,5	50
360710123	Assembly jig for fixing through the wall M10	M10	40x40x2,5	50
360710124	Assembly jig for fixing through the wall M8	M8	40x40x2,5	50

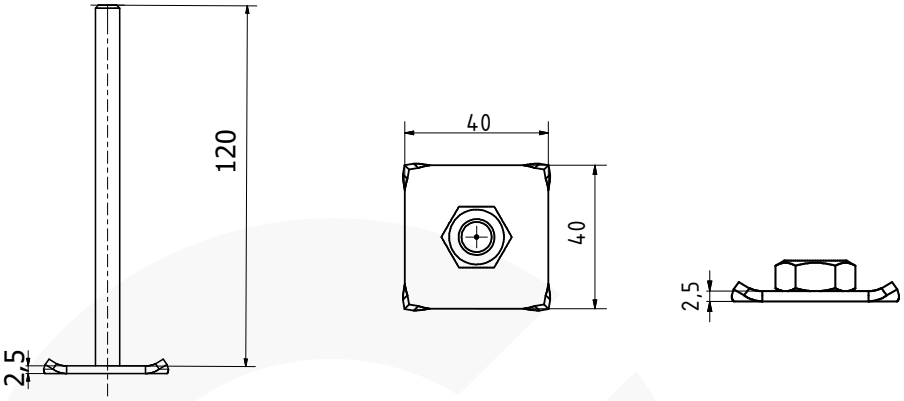

- ☑ material: steel
- ☑ galvanized

PIPE LABELING - LABEL M8

Ord. Code	TYPE	Package in pcs
370100009	Pipe labeling kit M8 complete (tag, lable, plastic cap)	50
370100010	Lable (spare part) for pipe labeling	1

PUMP AND BRUSH FOR HOLE CLEANING

Ord. Code	TYPE	Package in pcs
381660016	Bruses for hole cleaning 17 and 30 mm	2
381660030	Pump for hole cleaning	1

info@solida.cz +420 465 531 059 www.solidacz.com

SOLIDA

FASTENING SYSTEMS

STAINLESS STEEL PRODUCTS

pp: 59. - 69.

CZECH MANUFACTURER OF FASTENING SYSTEMS
www.solidacz.com

TWO-SCREW PIPE CLAMP V2A-AISI 304, V4A - AISI 316

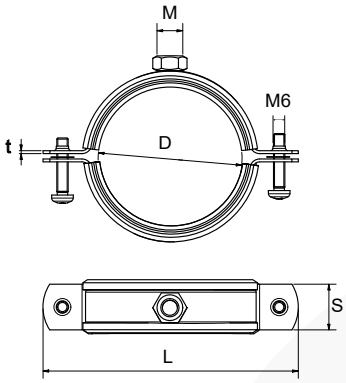

Ord. Code V2A	Ord. Code V4A	Ø D (mm)	L (mm)	M	S x t (mm)	Package in pcs
315001216	315101216	12 - 16	56	M8	20 x 1,2	100
315001719	315101719	17 - 19	59	M8	20 x 1,2	100
315002023	315102023	20 - 25	62	M8	20 x 1,2	100
315002530	315102530	26 - 30	68	M8	20 x 1,2	100
315003138	315103138	31 - 38	78	M8	20 x 1,2	100
315004046	315104046	40 - 46	88	M8	20 x 1,2	100
315004853	315104853	48 - 53	96	M8	20 x 1,2	50
315005459	315105459	54 - 59	101	M8	20 x 1,2	50
315006064	315106064	60 - 64	111	M8	20 x 1,2	50
315006771	315106771	67 - 71	116	M8	20 x 1,2	50
315007278	315107278	72 - 78	127	M10	25 x 1,5	50
315008186	315108186	81 - 86	138	M10	25 x 1,5	50
315008792	315108792	87 - 92	145	M10	25 x 1,5	50
315009510	315109510	95 - 103	156	M10	25 x 1,5	50
315101106	315111106	102 - 116	170	M10	25 x 2,0	50
315101121	315112112	121 - 127	185	M10	25 x 2,0	25
315101133	315113942	133 - 141	201	M10	25 x 2,0	25
315101159	315116468	159 - 168	230	M10	25 x 2,0	25

- ☑ material: stainless steel V2A, V4A
- ☑ damping insert EPDM

TWO-SCREW PIPE CLAMP V2A-AISI 304 W/O DAMPING INSERT

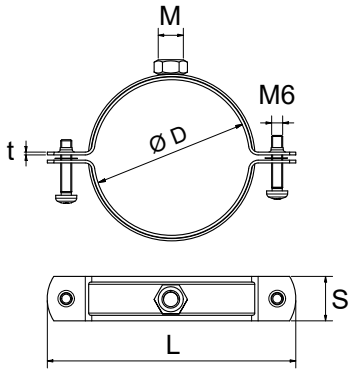

Ord. Code	Ø D (mm)	M	L (mm)	S x t (mm)	Fa,z (N)	Package in pcs
315300015	24 - 28	M8	56	20 x 1,25	800	100
315300018	29 - 31	M8	59	20 x 1,25	800	100
315300022	32 - 35	M8	62	20 x 1,25	800	100
315300028	37 - 42	M8	68	20 x 1,25	800	100
315300035	43 - 50	M8	78	20 x 1,25	800	100
315300040	52 - 58	M8	88	20 x 1,25	2100	100
315300047	60 - 66	M8	96	20 x 1,25	2100	50
315300054	66 - 71	M8	101	20 x 1,25	2100	50
315300060	72 - 76	M8	111	20 x 1,5	2500	50
315300070	79 - 83	M10	116	20 x 1,5	2500	50
315300075	84 - 90	M10	127	25 x 1,5	2500	50
315300081	93 - 98	M10	138	25 x 1,5	2500	50
315300091	99 - 104	M10	145	25 x 1,5	2500	50
315300100	105 - 113	M10	156	25 x 1,5	2500	50
315300111	114 - 128	M10	170	25 x 2,0	3000	50
315300125	131 - 137	M10	185	25 x 2,0	3000	50
315300140	143 - 151	M10	201	25 x 2,0	3000	25
315300160	169 - 178	M10	230	25 x 2,0	3000	25
315300220	220 - 229	M10	283	25 x 2,0	3000	12

- ☑ material: stainless steel V2A,

TWO-SCREW PIPE CLAMP FOR VENTILATION V2A

Ord. Code	Ø D (mm)	L (mm)	Max. load (N)	M	S x t (mm)	Package in pcs
318002080	80	130	600	M8/M10	25×1,5	50
318002090	90	140	600	M8/M10	25×1,5	50
318002101	100	150	600	M8/M10	25×1,5	50
318002112	112	162	600	M8/M10	25×1,5	25
318002126	125	175	600	M8/M10	25×1,5	25
318002141	140	190	600	M8/M10	25×1,5	25
318002151	150	200	600	M8/M10	25×1,5	25
318002161	160	210	600	M8/M10	25×1,5	25
318002182	180	230	600	M8/M10	25×1,5	25
318002201	200	250	600	M8/M10	25×1,5	25
318002226	224	274	600	M8/M10	25×1,5	25
318002251	250	300	600	M8/M10	25×2,0	25
318002281	280	330	600	M8/M10	25×2,0	25
318002301	300	350	600	M8/M10	25×2,0	15
318002317	315	365	600	M8/M10	25×2,0	15
318002357	355	405	600	M8/M10	25×2,0	10
318002401	400	450	600	M8/M10	25×2,0	10
318002452	450	500	800	M8/M10	25×2,0	1
318002502	500	550	800	M8/M10	25×2,0	1
318002562	560	610	800	M8/M10	25×2,0	1
318002600	600	650	800	M8/M10	25×2,0	1
318002632	630	680	800	M8/M10	25×2,0	1
318002710	710	760	800	M8/M10	25×2,0	1
318002801	800	850	800	M10	25×2,0	1

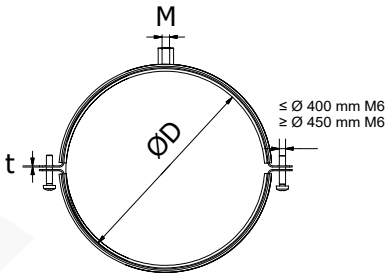

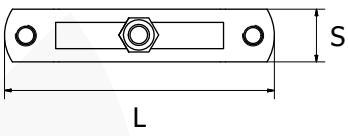

- ☑ material: stainless steel V2A
- ☑ damping insert EPDM

U-BOLT FROM ROUND STEEL V2A

Ord. Code	Ø D (mm)	D	M	L1 (mm)	La (mm)	Package in pcs
322402710	18	10	M6	25	58	1
322402715	21,3	15	M6	30	56	1
322402720	26,9	20	M6	34	61	1
322402725	33,7	25	M6	40	69	1
322402732	42,4	32	M8	52	80	1
322402740	44,5	40	M8	55	81	1
322402741	48,3	40	M8	56	85	1
322402750	52	50	M8	68	90	1
322402755	60,3	50	M8	70	95	1
322402765	70	65	M8	80	106	1
322402780	85	80	M10	98	125	1
322402781	88,9	80	M10	100	128	1
322402811	104	100	M10	115	165	1
322402816	114,3	100	M10	125	164	1
322402825	129	125	M10	143	168	1
322402830	139,7	125	M10	150	183	1
322402850	154	150	M12	170	223	1
322402855	168,3	150	M12	184	235	1

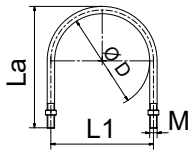

- ☑ material: stainless steel V2A

PIPE CLAMP „SOLID“ WITH RUBBER LINING M12 V2A

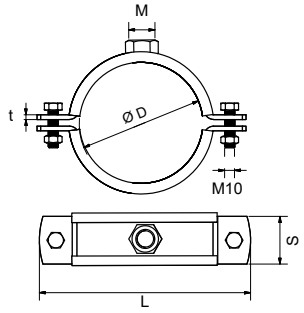

Ord. Code	Ø D (mm)	M	L (mm)	S x t (mm)	Fa,z (N)	Package in pcs
317970046	40 - 46	M12	131	40x4	9500	1
317970053	48 - 53	M12	138	40x4	9500	1
317970064	60 - 64	M12	149	40x4	9500	1
317970071	67 - 71	M12	157	40×4	9500	1
317970078	72 - 78	M12	165	40x4	9500	1
317970092	87 - 92	M12	170	40x4	9500	1
317970118	108 - 118	M12	210	40x4	9500	1
317970130	125 - 130	M12	227	40×4	9500	1
317970137	133 - 137	M12	228	40×4	9500	1
317970144	138 - 144	M12	245	40×4	9500	1
317970165	159 - 165	M12	260	40×4	9500	1
317970170	164 - 170	M12	272	40×4	9500	1
317970188	182 - 188	M12	275	40×4	9500	1
317970203	193 - 203	M12	300	40×4	9500	1
317970214	208 - 214	M12	300	40×4	9500	1
317970224	217 - 224	M12	310	40×4	9500	1
317970254	244 - 254	M12	345	40×4	9500	1
317970277	267 - 277	M12	365	40×4	9500	1
317970282	278 - 282	M12	380	40×4	9500	1
317970318	313 - 318	M12	420	40×4	9500	1
317970326	320 - 326	M12	415	40×4	9500	1
317970360	353 - 360	M12	455	40×4	9500	1

- ☑ material: stainless steel V2A
- ☑ damping insert: EPDM
- ☑ can be made with nut M16
- ☑ can be manufactured according to the customer's requirements

TWO-SCREW PIPE CLAMP „SOLID“ M12 V2A W/O DAMPING INSERT

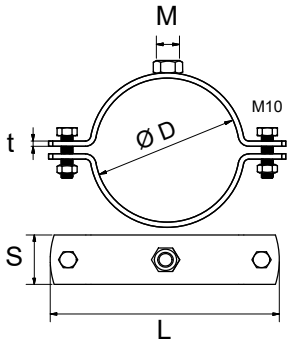

Ord. Code	Ø D (mm)	M	L (mm)	S x t (mm)	Fa,z (N)	Package in pcs
317971078	72 - 78	M12	165	40x4	9500	1
317971092	87 - 92	M12	170	40x4	9500	1
317971118	108 - 118	M12	210	40x4	9500	1
317971130	125 - 130	M12	227	40×4	9500	1
317971137	133 - 137	M12	228	40×4	9500	1
317971165	159 - 165	M12	260	40×4	9500	1
317971170	164 - 170	M12	272	40×4	9500	1
317971188	182 - 188	M12	275	40×4	9500	1
317971203	193 - 203	M12	300	40×4	9500	1
317971214	208 - 214	M12	300	40×4	9500	1
317971224	217 - 224	M12	310	40×4	9500	1
317971277	267 - 277	M12	365	40×4	9500	1
317971282	278 - 282	M12	380	40×4	9500	1
317971318	313 - 318	M12	420	40×4	9500	1
317971326	320 - 326	M12	415	40×4	9500	1
317971360	353 - 360	M12	455	40×4	9500	1

- ☑ material: stainless steel V2A
- ☑ can be made with nut M16
- ☑ can be manufactured according to the customer's requirements

info@solida.cz +420 465 531 059 www.solidacz.com

PIPE CLAMP „SOLID“ WITH RUBBER LINING M12 V4A

Ord. Code	Ø D (mm)	M	L (mm)	S x t (mm)	Fa,z (N)	Package in pcs
317972046	40 - 46	M12	131	40x4	9500	1
317972053	48 - 53	M12	138	40x4	9500	1
317972064	60 - 64	M12	149	40x4	9500	1
317972071	67 - 71	M12	157	40×4	9500	1
317972078	72 - 78	M12	165	40x4	9500	1
317972092	87 - 92	M12	170	40x4	9500	1
317972118	108 - 118	M12	210	40x4	9500	1
317972130	125 - 130	M12	227	40×4	9500	1
317972137	133 - 137	M12	228	40×4	9500	1
317972144	138 - 144	M12	245	40×4	9500	1
317972165	159 - 165	M12	260	40×4	9500	1
317972170	164 - 170	M12	272	40×4	9500	1
317972188	182 - 188	M12	275	40×4	9500	1
317972203	193 - 203	M12	300	40×4	9500	1
317972214	208 - 214	M12	300	40×4	9500	1
317972224	217 - 224	M12	310	40×4	9500	1
317972254	244 - 254	M12	345	40×4	9500	1
317972277	267 - 277	M12	365	40×4	9500	1
317972282	278 - 282	M12	380	40×4	9500	1
317972318	313 - 318	M12	420	40×4	9500	1
317972326	320 - 326	M12	415	40×4	9500	1
317972360	353 - 360	M12	455	40×4	9500	1

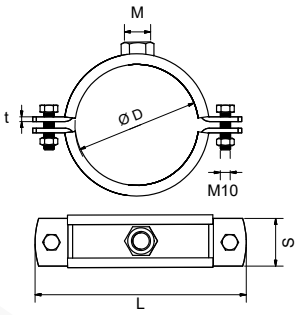

- ☑ material: stainless steel V4A
- ☑ damping insert: EPDM
- ☑ can be made with nut M16
- ☑ can be manufactured according to the customer's requirements

TWO-SCREW PIPE CLAMP „SOLID“ M12 V4A W/O DAMPING INSERT

Ord. Code	Ø D (mm)	M	L (mm)	S x t (mm)	Fa,z (N)	Package in pcs
317973078	72 - 78	M12	165	40x4	9500	1
317973092	87 - 92	M12	170	40x4	9500	1
317973118	108 - 118	M12	210	40x4	9500	1
317973130	125 - 130	M12	227	40×4	9500	1
317973137	133 - 137	M12	228	40×4	9500	1
317973165	159 - 165	M12	260	40×4	9500	1
317973170	164 - 170	M12	272	40×4	9500	1
317973188	182 - 188	M12	275	40×4	9500	1
317973203	193 - 203	M12	300	40×4	9500	1
317973214	208 - 214	M12	300	40×4	9500	1
317973224	217 - 224	M12	310	40×4	9500	1
317973277	267 - 277	M12	365	40×4	9500	1
317973282	278 - 282	M12	380	40×4	9500	1
317973318	313 - 318	M12	420	40×4	9500	1
317973336	320 - 326	M12	415	40×4	9500	1
317973360	353 - 360	M12	455	40×4	9500	1

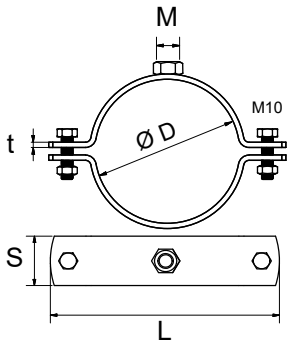

- ☑ material: stainless steel V4A
- ☑ can be made with nut M16
- ☑ can be manufactured according to the customer's requirements

CANTILEVER ARM 27/18x1,20 mm V2A

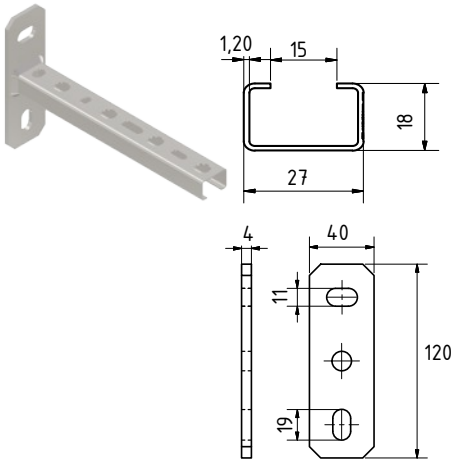

Ord. Code	L (mm)	Wall plate size (mm)	Material thickness (mm)	Package in pcs
332527200	200	120×40×4	1,2	20
332527300	300	120×40×4	1,2	20
332527500	500	120×40×4	1,2	10
332527600	600	120×40×4	1,2	1

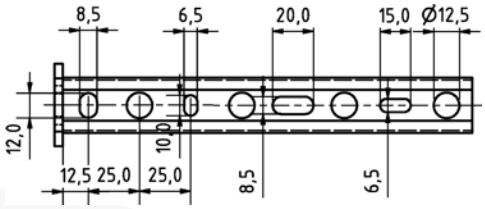

☑ material: stainless steel V2A

CANTILEVER ARM 28/30x1,5 mm V2A

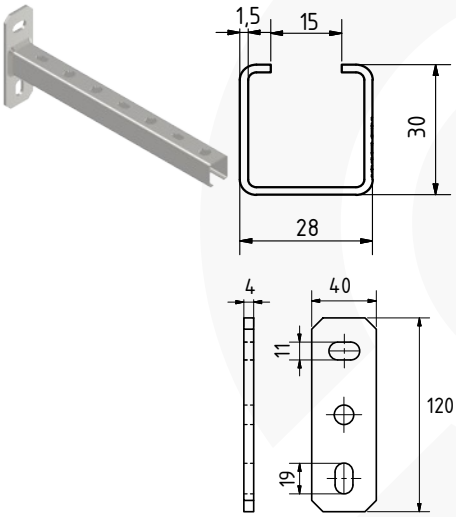

Ord. Code	L (mm)	Wall plate size (mm)	Material thickness (mm)	Package in pcs
332528200	200	120×40×4	1,5	10
332528300	300	120×40×4	1,5	10
332528440	440	120×40×4	1,5	10
332528500	500	120×40×4	1,5	10
332528600	600	120×40×4	1,5	1
332528750	750	120×40×4	1,5	1
332528900	900	120×40×4	1,5	1

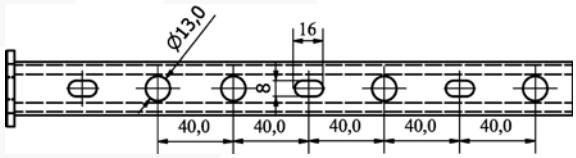

☑ material: stainless steel V2A

CANTILEVER ARM 38/40x2mm V2A

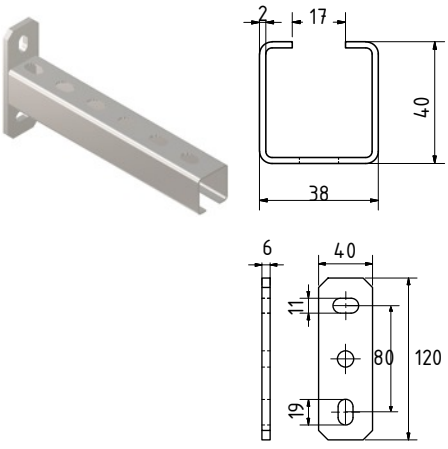

Ord. Code	L (mm)	Wall plate size (mm)	Material thickness (mm)	Package in pcs
332538200	200	120×40×4	2	10
332538300	300	120×40×4	2	10
332538400	400	120×40×4	2	7
332538500	500	120×40×4	2	7
332538600	600	120×40×4	2	1
332538700	700	120×40×4	2	1
332538750	750	120×40×4	2	1
332538800	800	120×40×4	2	1
332538900	900	120×40×4	2	1
332538950	950	120×40×4	2	1

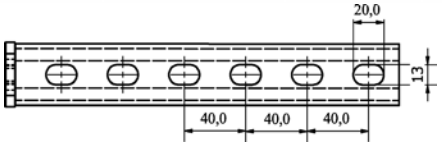

☑ material: stainless steel V2A

info@solida.cz +420 465 531 059 www.solidacz.com

FIXING RAIL 27/18x1,20 mm V2A

Ord. Code	L (mm)	t (mm)	Package in pcs
349527182	2000	1,2	1
349527183	3000	1,2	1
349527186	6000	1,2	1

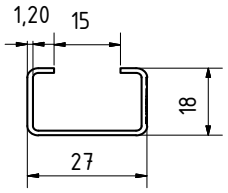

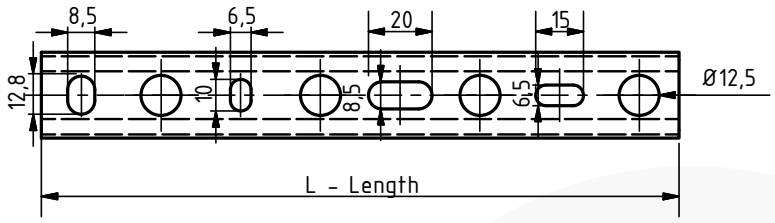

☑ material: stainless steel V2A

FIXING RAIL 28/30x1,5 mm V2A

Ord. Code	L (mm)	t (mm)	Package in pcs
349528302	2000	1,5	1
349528303	3000	1,5	1
349528306	6000	1,5	1

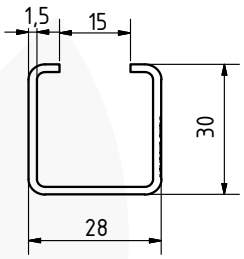

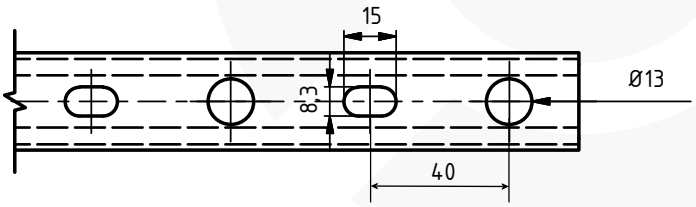

☑ material: stainless steel V2A

FIXING RAIL 38/40x2mm V2A

Ord. Code	L (mm)	t (mm)	Package in pcs
349538402	2000	2	1
331384032	3000	2	1
331384062	6000	2	1

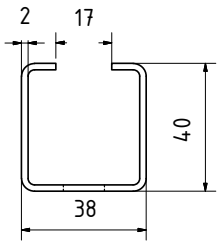

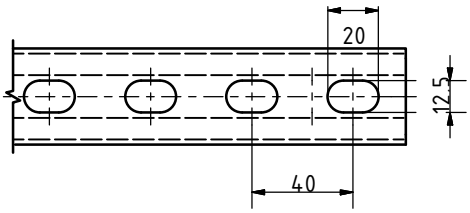

☑ material: stainless steel V2A

SLIDE NUT V2A

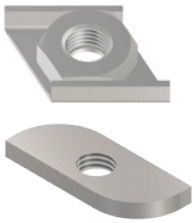

Ord. Code	M	Profiles	Package in pcs
331250827	M8	27/18 + 28/30	100
331250838	M8	38/40	100
331251038	M10	38/40	100

Profiles 38/40

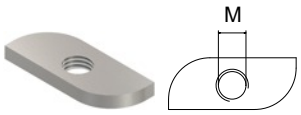

Profiles 27/18 + 28/30

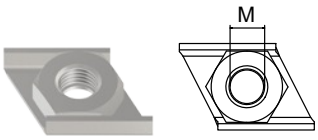

☑ material: stainless steel V2A

WALL PLATE V2A

Ord. Code	M	Dimensions (mm)	Package in pcs
321651086	M8	120x40x4	1
321651088	M10	120x40x4	1
321651092	M12	120x40x4	1
321651100	M8	78x25x2,5	1
321651110	M10	78x25x2,5	1
321651112	M12	78x25x2,5	1

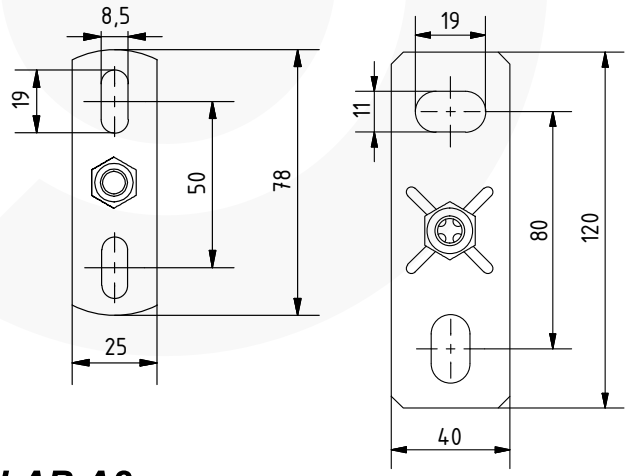

☑ material: stainless steel V2A

SUPPORT CHANNEL ŽLAB A2

Ord. Code	Ø D (mm)	L (mm)	Material (mm)	Package in pcs
377300120	20	2000	0,55	10
377300125	25	2000	0,55	10
377300132	32	2000	0,55	10
377300140	40	2000	0,55	10
377300150	50	2000	0,55	10
377300163	63	2000	0,55	10
377300175	75	2000	0,55	10
377300190	90	2000	0,55	10

Click

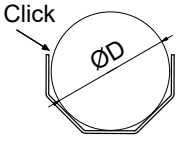

☑ fasten by click
☑ material: stainless steel V2A

info@solida.cz +420 465 531 059 www.solidacz.com

THREADED ROD V2A

Ord. Code	M (mm)	L (mm)	Package in pcs
322706010	M6	1000	100
322708010	M8	1000	50
322710010	M10	1000	25
322712010	M12	1000	20
322714010	M14	1000	10
322716010	M16	1000	10
322720010	M20	1000	5

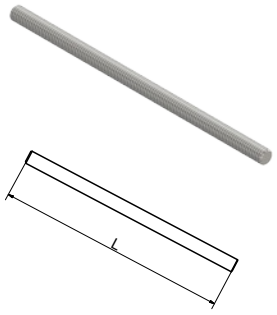

- ☑ material: stainless steel A2
- ☑ available in 2 m and 3 m lengths

STUD CREW V2A

Ord. Code	M	L (mm)	Package in pcs
321208050	M8	50	1
321208060	M8	60	1
321208070	M8	70	1
321208080	M8	80	1
321208090	M8	90	1
321208100	M8	100	1
321210080	M10	80	1
321210090	M10	90	1
321210100	M10	100	1
321210120	M10	120	1

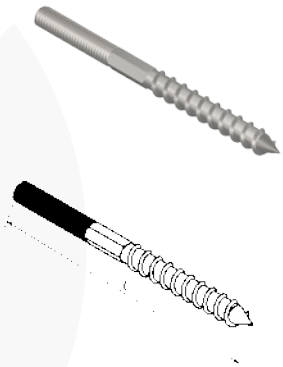

- ☑ material: stainless steel V2A

CONNECTING NUT V2A

Ord. Code	Thread	L (mm)	Package in pcs
324500630	M6	18	1
324500830	M8	24	1
324501030	M10	30	1
324501230	M12	36	1
324501640	M16	48	1

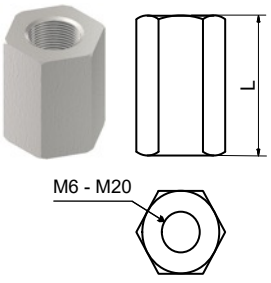

- ☑ material: stainless steel V2A

METRIC BOLT DIN 933 V2A

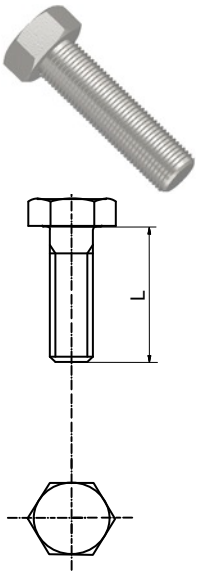

Ord. Code	M	Length L (mm)	DIN	Package in pcs
385706030	M6	30	933	1
385706035	M6	35	933	1
385706050	M6	50	933	1
385708025	M8	25	933	1
385708040	M8	40	933	1
385708060	M8	60	933	1
385708080	M8	80	933	1
385710020	M10	20	933	1
385710040	M10	40	933	1
385710060	M10	60	933	1
385710080	M10	80	933	1
385712025	M12	25	933	1
385712050	M12	50	933	1
385712055	M12	55	933	1
385716050	M16	50	933	1
385716060	M16	60	933	1
385716065	M16	65	933	1
385716070	M16	70	933	1
385716085	M16	85	933	1
385716090	M16	90	933	1

☑ material: stainless steel V2A

NUT A2, A4

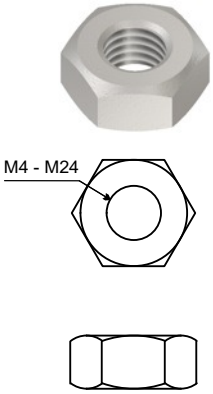

Ord. Code	A	Thread (mm)	Package in pcs
331400206	A2	M6	100
331400208	A2	M8	100
331400210	A2	M10	100
331400212	A2	M12	50
331400216	A2	M16	50
331400312	A4	M12	5

☑ material: stainless steel V2A, V4A

WASHER DIN 125-A V2A

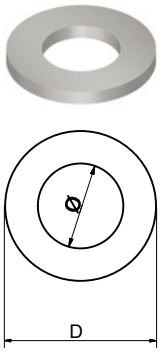

Ord. Code	Inner Ø (mm)	DIN	Package in pcs
331300308	8	125	100
331300310	10	125	100
331300312	12	125	100

☑ material: stainless steel V2A

info@solida.cz +420 465 531 059 www.solidacz.com

HOSE CLAMP W2, W4

Ord. Code	D Ø (mm)	Width (mm)	Package in pcs
	Stainless steel W2		
390100812	8–12	9	25
390101016	10–16	9	25
390101220	12–22	9	25
390101625	16–27	9	25
390102032	20–32	9	25
390102540	25–40	9	25
390103250	32–50	9	25
390104060	40–60	9	25
390105070	50–70	9	25
	Stainless steel W4		
390200812	8–12	9	25
390201016	10–16	9	25
390201220	12–20	9	25
390201625	16–25	9	25
390202032	20–32	9	25
390202540	25–40	9	25
390203250	32–50	9	25
390204060	40–60	9	25
390205070	50–70	9	25

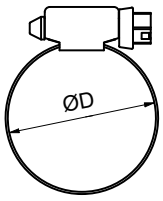

☑ material: stainless steel W2, W4

WC AND BIDET FIXING KIT

Ord. Code	Wall plug	Screw dimension (mm)	Package (set) in pcs
361300675	blue, black 10 PA	6x70	100
361300685	blue, black 10 PA	6x80	100
361300610	Fisher UX	6x100	20

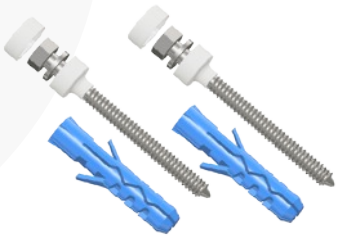

Kit contains:

2x screw with hexagon head
2x wall plug NYLON
2x washer
2x screw cap
1x plastic bag

☑ material: stainless steel

SADDLE SUPPORT V2A

Ord. Code	Type	Profiles	Wall plate size (mm)	Package in pcs
3X5000250	Standard	27/18 - 28/30	120x40x4	50
3X5000258	Standard	38/40	145x60x6	20
3X5000253	Articulated	27/18 - 28/30	130x4	1
3X5000257	Articulated	38/40	140x4	1
3X5000251	Transverse	27/18 - 28/30	120x40x4	50
3X5000254	Transverse	38/40	145x60x6	20

Articulated

Transverse

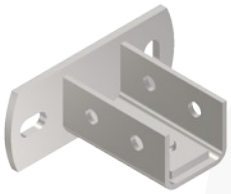

Standard 27/18 - 28/30

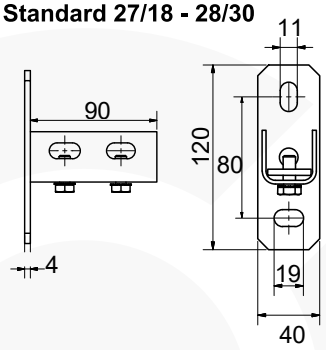

Standard 38/40

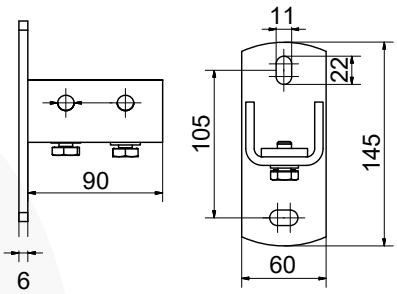

- ☑ material: stainless steel V2A
- ☑ with preassembled nut and screw

ROOFING SHEET HANGER V2A

Ord. Code	M / Ø D (mm)	Allowable load (N)	S x t (mm)	Package in pcs
322020008	M8 solid	1300	25 x 2	100
322020010	M10 solid	1300	25 x 2	100
322020013	13	1300	25 x 2	100

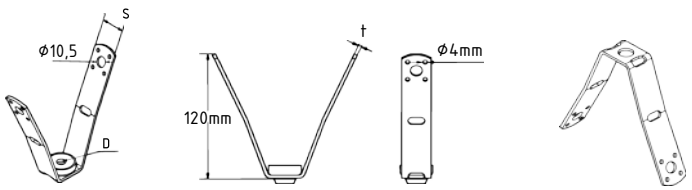

- ☑ material: stainless steel V2A

info@solida.cz +420 465 531 059 www.solidacz.com

SOLIDA

FASTENING SYSTEMS

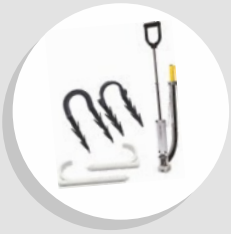

FLOOR PIPE FASTENING

pp: 71. - 72.

FIRE PROTECTION SYSTEMS

pp: 73. - 74.

STREET AND ROOF DRAINAGE

p. 75

FASTENING FOR ELECTRONICS

p. 76

FIXING POINTS AND SLIDING SUPPORTS

pp: 77. - 78.

HEAVY DUTY "ON" FASTENING

pp: 79. - 85.

CZECH MANUFACTURER OF FASTENING SYSTEMS
www.solidacz.com

HAMMER-IN PLASTIC DOWEL (SINGLE-ARM, DOUBLE-ARM) 8mm

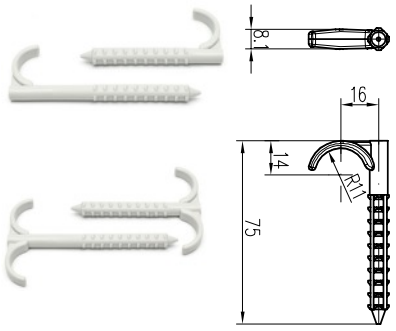

Ord. Code	TYPE	Package in pcs
384183275	Hammer-in plastic dowel - single-arm plug clamp N1x32-8/75	50
384183295	Hammer-in plastic dowel - single-arm plug clamp N1x32-8/95	50
384182575	Hammer-in plastic dowel - single-arm plug clamp N1x25-8/75	50
384182595	Hammer-in plastic dowel - single-arm plug clamp N1x25-8/95	50
384283275	Hammer-in plastic dowel - double-arm plug clamp N2x32-8/75	50
384283295	Hammer-in plastic dowel - double-arm plug clamp N2x32-8/95	50
384282575	Hammer-in plastic dowel - double-arm plug clamp N2x25-8/75	50
384282595	Hammer-in plastic dowel - double-arm plug clamp N2x25-8/95	50

- ☑ material: PA
- ☑ max. temperature: 130ºC

PIPE TRIMS - SINGLE TRIM

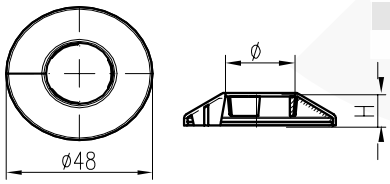

Ord. Code	TYPE	Package in pcs
384006012	Pipe trim MCH single D12 white	50
384006015	Pipe trim MCH single D15 white	50
384006016	Pipe trim MCH single D16 white	50
384006018	Pipe trim MCH single D18 white	50
384006020	Pipe trim MCH single D20 white	50
384006022	Pipe trim MCH single D22 white	50
384006023	Pipe trim MCH single D25-26 white	50
384006028	Pipe trim MCH single D28 white	50
384006212	Pipe trim MCH single D12 chrome	50
384006215	Pipe trim MCH single D15 chrome	50
384006216	Pipe trim MCH single D16 chrome	50
384006218	Pipe trim MCH single D18 chrome	50
384006220	Pipe trim MCH single D20 chrome	50
384006222	Pipe trim MCH single D22 chrome	50
384006225	Pipe trim MCH single D25-26 chrome	50
384006228	Pipe trim MCH single D28 chrome	50

TWIN-TRIM PIPE FRAMES

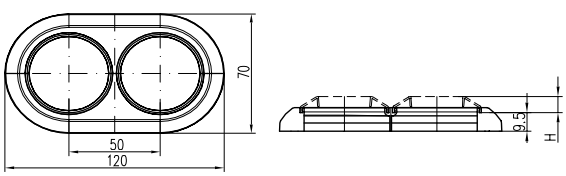

Ord. Code	TYPE	Package in pcs
313208112	Twin-trim frame - white	25
313208162	Twin-trim frame - chrome	25

info@solida.cz +420 465 531 059 www.solidacz.com

FLOOR BRACKETS MCH FOR TYPES B, C, D

Ord. Code	TYPE	Package in pcs
390000304	Floor bracket MCH TYPE B	50
390000305	Floor bracket MCH TYPE C	50
390000306	Floor bracket MCH TYPE D	200

TYPE D

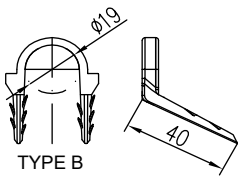

TYPE B

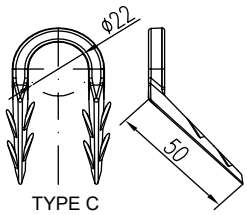

TYPE C

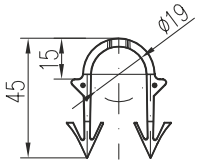

TYPE D

TYPE B

TYPE C

FLOOR BRACKETS MCH TYPE A

Ord. Code	TYPE	Package in pcs
390000303	Floor bracket MCH TYPE A	100

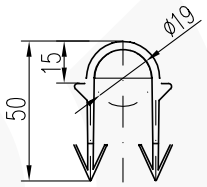

INSULATION STAPLE

Ord. Code	TYPE	Package in pcs
390000301	Inculation staple - dark	100
390000302	Inculation staple - bright	100

STAPLER - FLOOR BRACKETS APPLICATOR FOR TYPE D

Ord. Code	TYPE	Package in pcs
390000310	Tacker - floor staple applicator	1

TAPES, PROTECTION, JOIN SEALANTS

Cuff PS

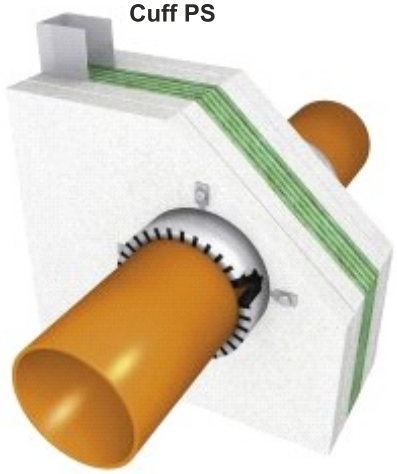

Ord. Code	TYPE	Package in pcs
3P0030050	PS-cuff 30/50	1
3P0030063	PS-cuff 30/63	1
3P0030075	PS-cuff 30/75	1
3P0030090	PS-cuff 30/90	1
3P0030110	PS-cuff 30/110	1
3P0030125	PS-cuff 30/125	1
3P0030160	PS-cuff 30/160	1
3P0060200	PS-cuff 60/200	1
3P0060225	PS-cuff 60/225	1
3P0060250	PS-cuff 60/250	1
3P0060315	PS-cuff 60/315	1
3P0060420	PS-cuff 60/420	1
320900001	Dunaboard - makka gasket 60x600x1000 (0,6m2)	1

Tape PS 25

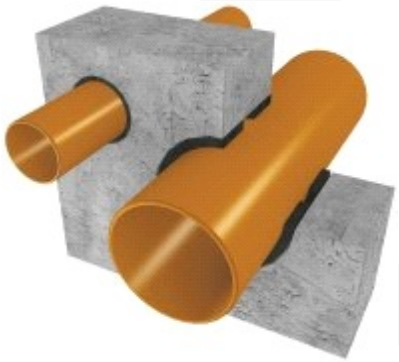

Ord. Code	TYPE	Package in m
3P0002560	PS 25 tape 2,5x60 (30m)	30

Dilatation part

Ord. Code	TYPE
3P0000051	Dunaseal part for dilatation 30mm
3P0000052	Dunaseal part for dilatation 60mm

info@solida.cz +420 465 531 059 www.solidacz.com

COATINGS, TEMPLATES, INSERTS, FOAMS

Ord. Code	TYPE	Package
3P0000010	Polylack F sealant 12,5kg	12,5 kg
3P0000011	Polylack K putty 12,5kg	12,5 kg
3P0000012	Polylack K putty 310ml	1 pcs
3P0000013	Polylack K putty 600ml salami	1 pcs
3P0000014	Polylack KG putty with graphite 12,5kg	12,5 kg
3P0000015	Polylack KG putty with graphite 310ml	1 pcs
3P0000016	Polylack Elastik-acrylic sealant 12,5kg	12,5 kg
3P0000017	Polylack DC110 coating cables 20kg	20 kg
3P0000018	Polylack A604 coating on construction 30kg	30 kg
3P0000019	Polylack G spraying on construction 15kg	15 kg

POLYLACK F SEALANT

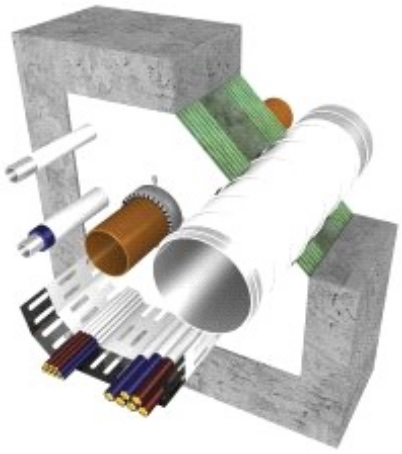

COATING FOR STEEL CONSTRUCTIONS

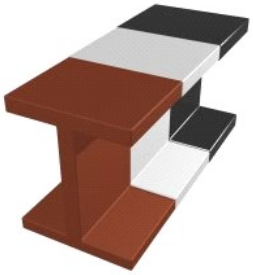

CEMENT SPRAYING

PUTTY

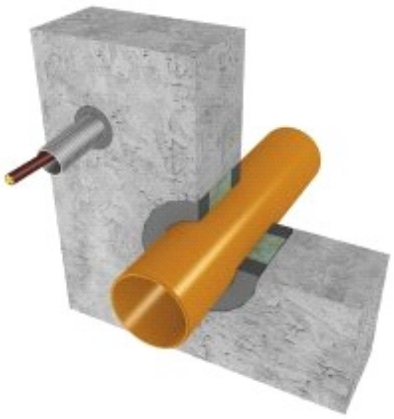

Ord. Code	TYPE	Package in pcs
3P0000050	Dunafoam 1K PUR FOAM 700ml	1

FOAM

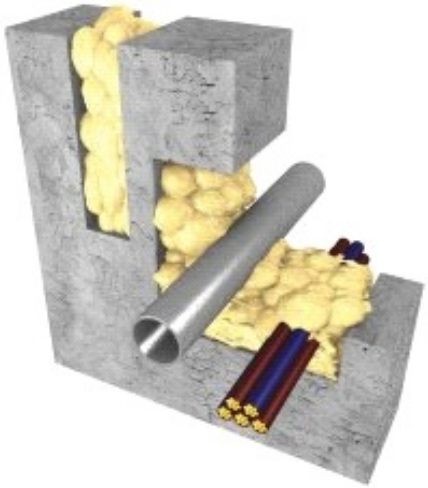

CANALIZATION DRAIN

Ord. Code	TYPE	Package in pcs
399030160	Bottom street drain D 110/125 - STANDARD	4
399030161	Side street drain D 110 - STANDARD	4
399030170	Side street drain D 110 - 250	1
399030171	Bottom street drain D 160	1

D 110/125 STANDARD

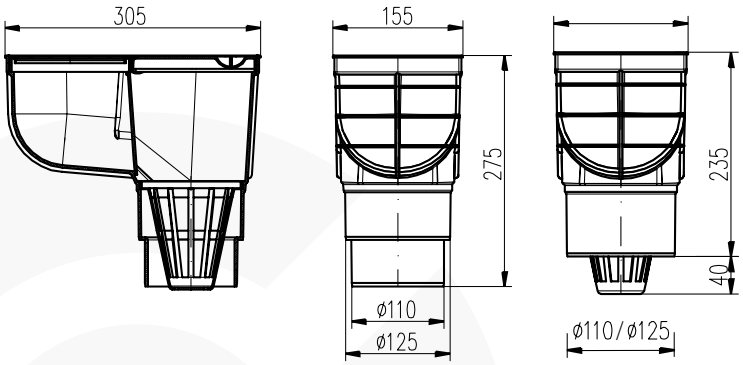

D 110 STANDARD

D 160

D 110 - 250

- ☑ material: Polypropylene with UV stabilization
- ☑ load: K3 - 300 Kg
- ☑ max. temperature 90 ºC
- ☑ norm EN 12531
- ☑ flow 390/530 l/min

info@solida.cz +420 465 531 059 www.solidacz.com

H DRIVE-ON CLAMP

Ord. Code	Beam strength (mm)	Min. insert. length (mm)	Max. load (N)	Package in pcs
322039004	1,5 - 04	18	700	100
322039007	08 - 14	25	900	100
322039008	10 - 15	25	900	100
322039009	04 - 10	25	900	100
322039010	15 - 20	25	900	100
322039011	24 - 30	25	900	100

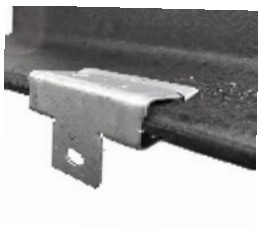

- ☑ material: spring steel
- ☑ surface finish: Delta Tone 9000
- ☑ hole 6,3 mm
- ☑ only for static loads

Ord. Code	Beam strength (mm)	Min. insert. length (mm)	Max. load (N)	Package in pcs
322041001	4 - 10	18	200	100
322041002	10 - 15	25	200	100

- ☑ material: spring steel
- ☑ surface finish: Delta Tone 9000
- ☑ for M6
- ☑ only for static loads

CLIP INTO TRAPEZOIDAL SHEETS

Ord. Code	Ø D (mm)	Package in pcs
322030001	7 - 8	100

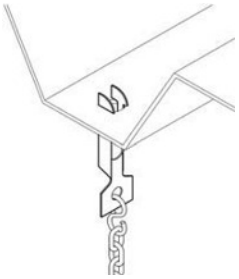

- ☑ material: spring steel
- ☑ surface finish: Delta Tone 9000
- ☑ hole 6,3 mm

SET FOR FIXED POINT

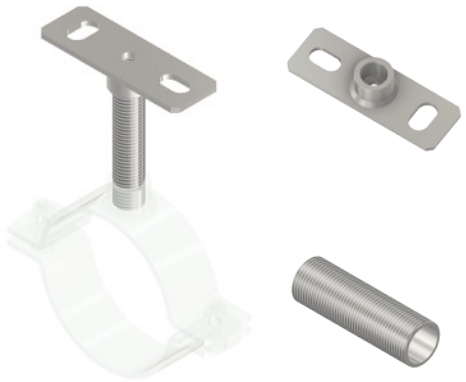

Ord. Code	M	Width x mat. thickness S x L x t (mm)	Package in pcs
	Wall plate		
321601285	1/2"	120x40x4	25
321610000	1"	120x60x4	1

Ord. Code	M	L - Length (mm)	Package in pcs
	Pipe		
322038133	1/2"	2000	10
322038131	1"	2000	10

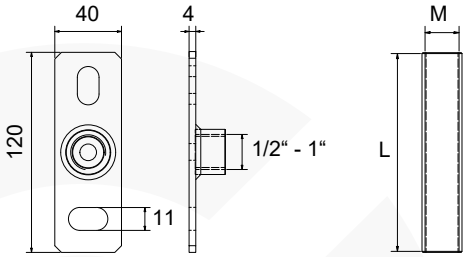

- ☑ material: steel
- ☑ galvanized
- ☑ pipe clamps on page 9
- ☑ for design and technical information please contact our Technical department

SET FOR FIXED POINT WITH FIXING

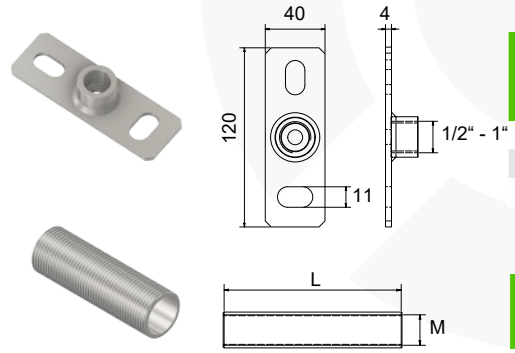

Ord. Code	M	Width x mat. thickness S x L x t (mm)	Package in pcs
	Wall plate		
321601285	1/2"	120x40x4	1
321610000	1"	120x60x4	1

Ord. Code	M	Length (mm)	Package in pcs
	Pipe		
322038133	1/2"	2000	1
322038131	1"	2000	1

Ord. Code	TYPE	Ø D (mm)	Package in pcs
	Angle for fixing		
337007046	Angle 38 - 45°	11 / 13	1
	Wall plate with fitting		
321610011	Wall plate 1/2"	13 / 13	1
321610010	Wall plate 1"	13 / 13	1

Angle for fixing

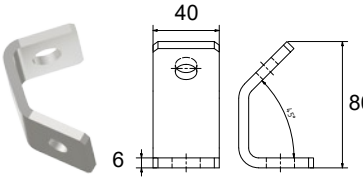

Wall plate with fitting

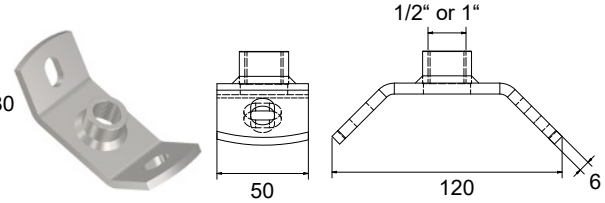

- ☑ material: steel
- ☑ galvanized
- ☑ pipe clamps on page 9
- ☑ for design and technical information please contact our Technical department
- ☑ fasteners and threaded rods M12 are not included in the set

info@solida.cz +420 465 531 059 www.solidacz.com

ASSEMBLY FOR FIXED POINT - FIX

Ord. Code	TYPE	Package in pcs
334210000	Cantilever arm for fixed point - set	1

Set contains 2 pieces of FIX Cantilever arm.

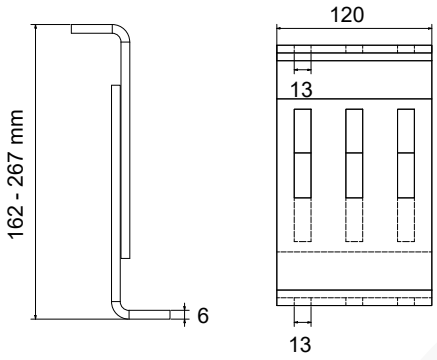

- ☑ material: steel
- ☑ galvanized
- ☑ suitable for pipe clamps type „SOLID“
- ☑ can be fitted with up to 3 pipe clamps
- ☑ for design and technical information please contact our Technical department

ASSEMBLY FOR FIXED POINT - COOLING

Ord. Code	TYPE	Package in pcs
370050002	76,1 / 30mm	1
370050001	88,9 / 30mm	1
370050003	108 / 40mm	1
370050007	159 / 40mm	1
370050011	219,1 / 60mm	1
370050013	273,0 / 60mm	1

- ☑ material: polyurethane foam
- ☑ foam density: 250 kg/m3
- ☑ temperature range: 50 °C to +105 °C

SLIDING SLEDGE

Ord. Code	M	Displacement path (mm)	Package in pcs
Sliding sledge			
341000008	8	60	1
341000010	10	55	1
Sliding element			
341000001	8	24	1
341000002	10	24	1

Sliding sledge **Sliding element**

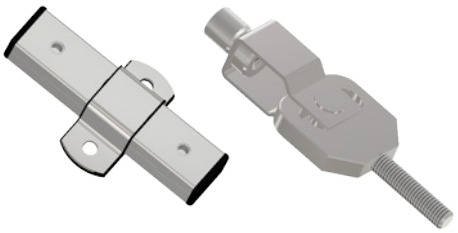

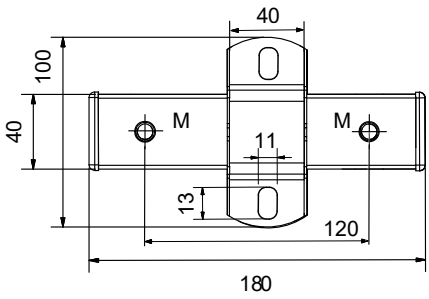

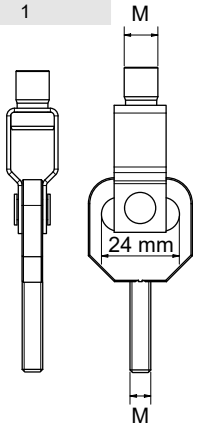

- ☑ material: steel
- ☑ galvanized

TWO-PARTS PIPE CLAMP WITH 2 SCREWS TYPE 130600

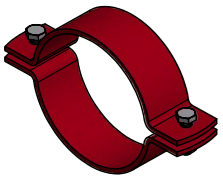

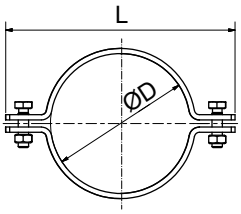

Ord. Code	DN	Ø D (mm)	L (mm)	Weight (kg)	Package in pcs
351020020	20	28	105	0,28	25
351020025	25	32	110	0,3	25
351020032	32	38	120	0,34	25
351020040	40	45	125	0,36	25
351020050	50	57	150	0,72	25
351020065	65	76	170	0,84	25
351020080	80	89	185	0,92	25
351020100	100	108	210	1,7	25
351020125	125	133	235	1,95	25
351020150	150	159	260	2,1	25
351020200	200	219	350	5,1	10
351020250	250	273	450	5,9	10
351020300	300	324	480	8,7	10
351020350	350	377	540	9,9	10
351020400	400	426	620	16,1	10
351020500	500	530	730	18	10
351020600	600	630	850	31,9	10
351020700	700	720	940	35,8	10
351020800	800	820	1040	39,8	10

- ☑ material: steel
- ☑ surface finish – base coating
- ☑ products are only on order

TWO-PARTS PIPE CLAMP WITH 3 SCREWS TYPE 130602

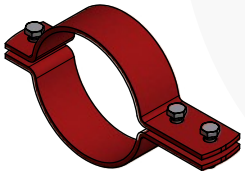

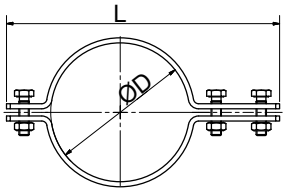

Ord. Code	DN	Ø D (mm)	L (mm)	Weight (kg)	Package in pcs
351030020	20	28	165	0,43	25
351030025	25	32	170	0,45	25
351030032	32	38	180	0,48	25
351030040	40	45	205	0,53	25
351030050	50	57	230	1,1	25
351030065	65	76	250	1,2	25
351030080	80	89	265	1,28	25
351030100	100	108	300	2,32	25
351030125	125	133	325	2,57	25
351030150	150	159	350	2,74	25
351030200	200	219	450	6,3	10
351030250	250	273	525	7,3	10
351030300	300	324	600	10,5	10
351030350	350	377	680	12	10
351030400	400	426	770	19,4	10
351030500	500	530	880	22,3	10
351030600	600	630	1000	37,3	10
351030700	700	720	1090	40,5	10
351030800	800	820	1190	44,5	10

- ☑ material: steel
- ☑ surface finish – base coating
- ☑ products are only on order

info@solida.cz +420 465 531 059 www.solidacz.com

TWO-PARTS PIPE CLAMP WITH 4 SCREWS TYPE 130604

Ord. Code	DN	Ø D (mm)	L (mm)	Weight (kg)	Package in pcs
351040020	20	28	165	0,43	1
351040025	25	32	170	0,45	1
351040032	32	38	180	0,48	1
351040040	40	45	205	0,53	1
351040050	50	57	230	1,1	1
351040065	65	76	250	1,2	1
351040080	80	89	265	1,28	1
351040100	100	108	300	2,32	1
351040125	125	133	325	2,57	1
351040150	150	159	350	2,74	1
351040200	200	219	450	6,3	1
351040250	250	273	525	7,3	1
351040300	300	324	600	10,5	1
351040350	350	377	680	12	1
351040400	400	426	770	19,4	1
351040500	500	530	880	22,3	1
351040600	600	630	1000	37,3	1
351040700	700	720	1090	40,5	1
351040800	800	820	1190	44,5	1

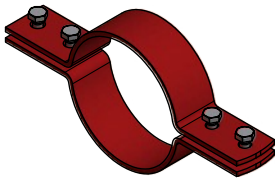

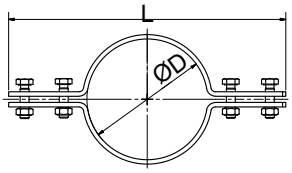

- ☑ material: steel
- ☑ surface finish – base coating
- ☑ products are only on order

BRACKET FOR STEEL PIPES TYPE 130620

Ord. Code	DN	Ø D (mm)	C (mm)	L (mm)	Weight (kg)	Package in pcs
354020010	10	20	40	53	0,04	1
354020015	15	25	45	60	0,05	1
354020020	20	32	47	65	0,06	1
354020025	25	36	60	83	0,14	1
354020032	32	45	67	94	0,17	1
354020040	40	51	70	100	0,18	1

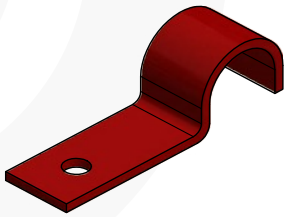

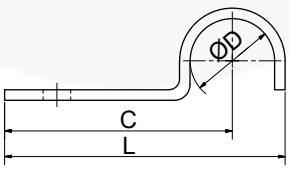

- ☑ material: steel
- ☑ surface finish – base coating
- ☑ products are only on order

FLANGE FOR RODS OF CROSS SECTION IE TYPE 130645

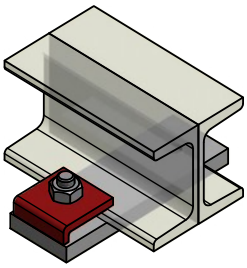

Ord. Code	IE	E (mm)	M	Weight (kg)	Package in pcs
354045010	100-120	7	M10	0,125	1
354045014	140-160	8	M12	0,25	1
354045022	180-200	8	M16	0,41	1
354045027	220-240	9	M20	0,61	1
354045030	270-300	10	M24	0,75	1

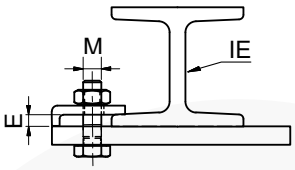

- ☑ material: steel
- ☑ surface finish – base coating
- ☑ products are only on order

SLIDING SUPPORT TYPE 130800

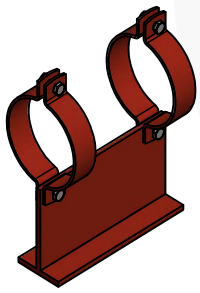

Ord. Code	DN	V (mm)	b (mm)	L (mm)	Weight (kg)	Package in pcs
352000020	20	100	40	200	1,6	1
352000025	25	100	40	200	1,65	1
352000032	32	120	50	200	2	1
352000040	40	120	50	200	2,1	1
352000050	50	155	50	200	3,1	1
352000065	65	165	60	200	3,4	1
352000080	80	170	60	200	3,6	1
352000100	100	200	60	250	6,6	1
352000125	125	220	80	250	7,2	1
352000150	150	240	80	250	7,8	1

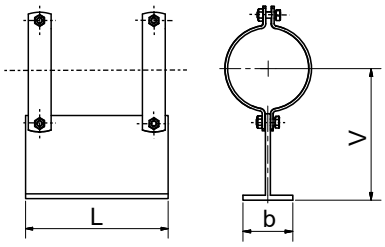

- ☑ material: steel
- ☑ surface finish – base coating
- ☑ pipe clamp: type 130600
- ☑ products are only on order

info@solida.cz +420 465 531 059 www.solidacz.com

SLIDING SUPPORT TYPE 130802

Ord. Code	DN	V (mm)	b (mm)	L (mm)	Weight (kg)	Package in pcs
352000200	200	290	150	300	20,9	1
352000250	250	330	150	300	23,1	1
352000300	300	380	190	300	34,7	1
352000350	350	400	190	300	36,6	1
352000400	400	430	210	350	53,3	1
352000500	500	500	210	350	60,4	1
352000600	600	560	260	400	97,5	1
352000700	700	630	260	400	107	1
352000800	800	700	260	400	117	1

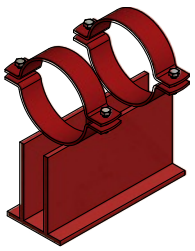

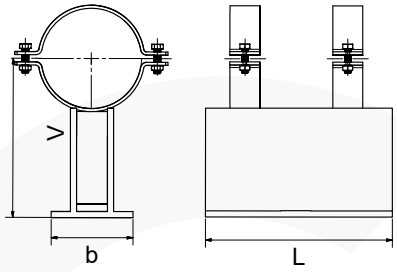

- ☑ material: steel
- ☑ surface finish – base coating
- ☑ pipe clamp: type 130600
- ☑ products are only on order

AXIAL SLIDING SUPPORT TYPE 130801.1

Ord. Code	DN	V (mm)	b (mm)	L (mm)	a (mm)	c (mm)	Weight (kg)	Package in pcs
352100020	20	100	50	200	40	40	1	1
352100025	25	100	50	200	40	40	2	1
352100032	32	120	50	200	40	50	2,4	1
352100040	40	122	50	200	40	50	2,5	1
352100050	50	155	60	200	45	50	3,6	1
352100065	65	165	60	200	45	60	3,9	1
352100080	80	170	60	200	45	60	4,1	1
352100100	100	200	80	250	60	60	7,7	1
352100125	125	220	80	250	60	80	8,4	1
352100150	150	240	100	250	60	80	9	1

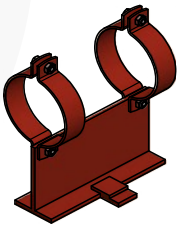

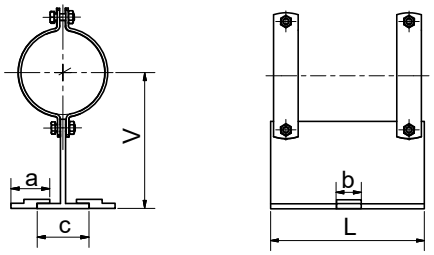

- ☑ material: steel
- ☑ surface finish – base coating
- ☑ pipe clamp: type 130600
- ☑ products are only on order

AXIAL SLIDING SUPPORT TYPE 130801.2

TYPE 130801.2

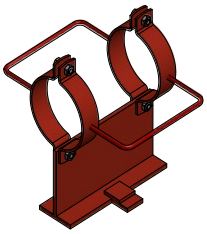

Ord. Code	DN	V (mm)	b (mm)	L (mm)	L1 (mm)	a (mm)	c (mm)	Weight (kg)	Package in pcs
352110020	20	100	50	200	200	40	40	3	1
352110025	25	100	50	200	200	40	40	3	1
352110032	32	120	50	200	240	40	50	3,5	1
352110040	40	122	50	200	240	40	50	3,6	1
352110050	50	155	60	200	310	45	50	4,8	1
352110065	65	165	60	200	330	45	60	5,1	1
352110080	80	170	60	200	340	45	60	5,3	1
352110100	100	200	80	250	400	60	60	10	1
352110125	125	220	80	250	440	60	80	10,7	1
352110150	150	240	100	250	480	60	80	11,5	1

- ☑ material: steel
- ☑ surface finish – base coating
- ☑ pipe clamp: type 130600
- ☑ products are only on order

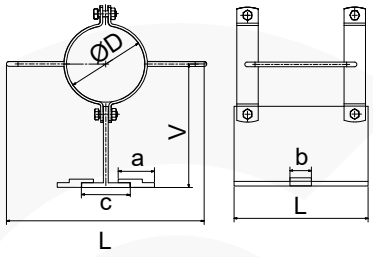

AXIAL SLIDING SUPPORT TYPE 130803.1 AND 130803.2

TYPE 130803.2

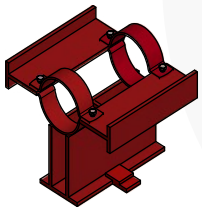

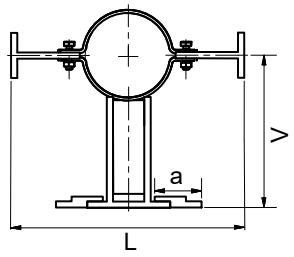

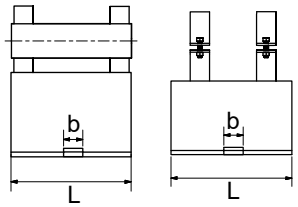

Ord. Code	DN	V (mm)	b (mm)	L (mm)	a (mm)	L1 (mm)	Weight (kg)	Package in pcs
TYP 130803.1								
352100200	200	290	100	300	75	470	22,2	1
352100250	250	330	120	300	75	540	24,3	1
352100300	300	380	120	300	90	620	36,8	1
352100350	350	400	120	300	90	670	38,8	1
352100400	400	430	120	350	100	740	55,7	1
352100500	500	500	120	350	100	860	62,8	1
352100600	600	560	150	400	120	980	102	1
352100700	700	630	150	400	120	1070	111	1
352100800	800	700	150	400	120	1170	121	1
TYP 130803.2								
352110200	200	290	100	300	75	470	27,8	1
352110250	250	330	120	300	75	540	30	1
352110300	300	380	120	300	90	620	44,4	1
352110350	350	400	120	300	90	670	46,3	1
352110400	400	430	120	350	100	740	65,1	1
352110500	500	500	120	350	100	860	72,2	1
352110600	600	560	150	400	120	980	116	1
352110700	700	630	150	400	120	1070	125	1
352110800	800	700	150	400	120	1170	135	1

TYPE 130803.1

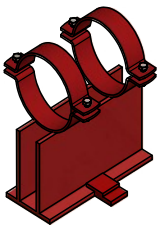

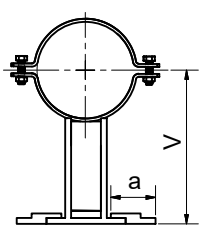

- ☑ material: steel
- ☑ surface finish – base coating
- ☑ pipe clamp: type 130600
- ☑ products are only on order

info@solida.cz +420 465 531 059 www.solidacz.com

SUPPORT OF FIXED POINT TYPE 130851, TYPE 130852, TYPE 130853

Ord. Code	Třmeny	DN	Ø D (mm)	V (mm)	L (mm)	a (mm)	Weight (kg)	Package in pcs
353000065	2	65	76	165	120	135	4,9	1
353000080	2	80	89	170	120	150	5,3	1
353000100	2	100	115	200	140	190	7,85	1
353000125	2	125	133 / 140	220	160	225	9,8	1
353000150	2	150	159 / 169	240	160	245	12,6	1
353000200	2	200	219	290	160	308	16,7	1
353000250	2	250	273	330	240	365	28,4	1
353000300	2	300	324	380	240	425	36,4	1
353000350	2	350	356 / 377	400	240	460	39,2	1
353000400	2	400	407 / 426	430	300	515	58,4	1
353000500	2	500	508 / 530	500	300	630	70,9	1
353030065	3	65	76	165	180	135	7,3	1
353030080	3	80	89	170	180	150	7,9	1
353030100	3	100	115	200	210	190	11,8	1
353030125	3	125	133 / 140	220	240	225	14,9	1
353030150	3	150	159 / 169	240	240	245	17,65	1
353030200	3	200	219	290	240	308	24,6	1
353030250	3	250	273	330	360	365	41,45	1
353030300	3	300	324	380	360	425	50,5	1
353030350	3	350	356 / 377	400	360	460	56,3	1
353030400	3	400	407 / 426	430	440	515	83,05	1
353030500	3	500	508 / 530	500	440	630	101,35	1
353030600	3	600	619 / 630	560	600	755	149	1
353030700	3	700	720	630	600	845	166	1
353030800	3	800	820 / 822	700	600	945	182	1

TYPE 130851

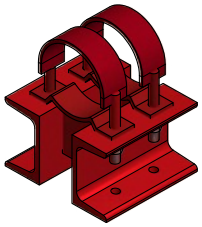

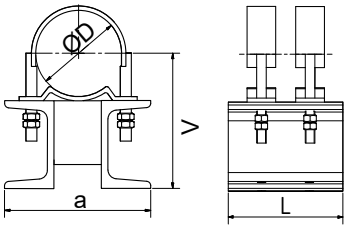

TYPE 130853

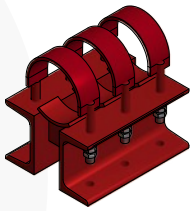

TYPE 130852

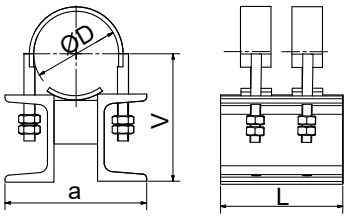

TYPE 130853

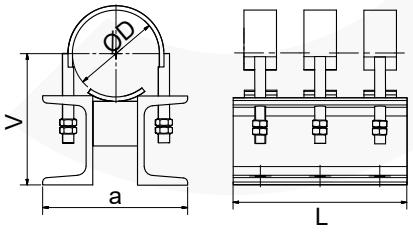

TYPE 130852

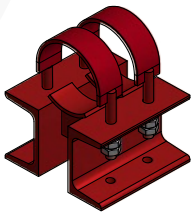

- ☑ material: steel
- ☑ surface finish – base coating
- ☑ pipe clamp: type 130600
- ☑ products are only on order

U-BOLT FROM FLAT STEEL ČSN 130725.1 AND ČSN 130725.2

TYPE 130725.1

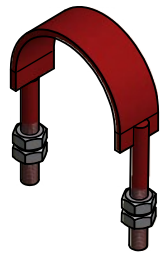

TYPE 130725.2

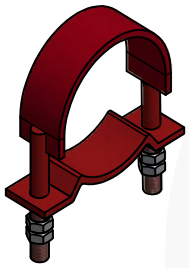

Ord. Code	DN	D (mm)	M (mm)	b (mm)	C (mm)	Weight (kg)	Package in pcs
			TYP 130725.1				
32404065	65	78	M12	40	90	0,48	1
32404080	80	93	M12	40	105	0,55	1
32404100	100	118	M16	40	134	0,85	1
32404125	125	145	M16	40	161	0,95	1
32404150	150	173	M20	50	193	1,85	1
32404200	200	225	M20	50	245	2,15	1
32404250	250	276	M24	60	300	3,45	1
32404300	300	331	M24	60	355	3,88	1
32404350	350	360	M24	60	384	4,2	1
32404400	400	415	M30	80	445	7,8	1
32404500	500	515	M30	80	545	9	1
32404600	600	619	M36	100	655	14,5	1
32404700	700	720	M36	100	756	16,5	1
32404800	800	822	M36	100	858	19,5	1
			TYP 130725.2				
354025065	65	78	M12	40	90	0,68	1
354025080	80	93	M12	40	105	0,77	1
354025100	100	118	M16	40	134	1,2	1
354025125	125	145	M16	40	161	1,4	1
354025150	150	173	M20	50	193	2,77	1
354025200	200	225	M20	50	245	3,15	1
354025250	250	276	M24	60	300	4,96	1
354025300	300	331	M24	60	355	5,63	1
354025350	350	360	M24	60	384	6,1	1
354025400	400	415	M30	80	445	11,5	1
354025500	500	515	M30	80	545	13,5	1
354025600	600	619	M36	100	655	22,5	1
354025700	700	720	M36	100	756	26,5	1
354025800	800	822	M36	100	858	30	1

TYPE 130725.1

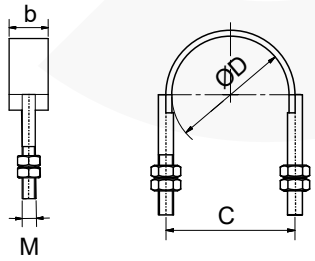

TYPE 130725.2

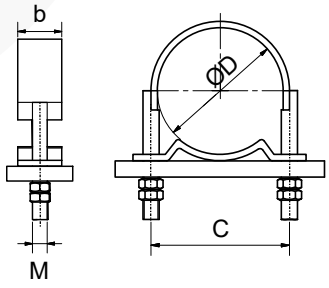

- ☑ material: steel
- ☑ surface finish – base coating
- ☑ products are only on order

info@solida.cz +420 465 531 059 www.solidacz.com

SOLIDA

FASTENING SYSTEMS

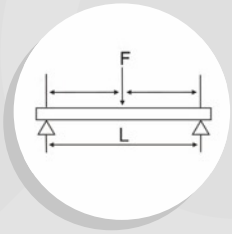

DIMENSIONS AND LOAD CAPACITY

pp: 87. - 96.

CZECH MANUFACTURER OF FASTENING SYSTEMS
www.solidacz.com

STEEL PIPES

DN	Inch	Outer diameter (mm)	Pipe weight (kg/m)	Water-filled pipe weight (kg/m)	Attachment distance (m)	Water filled pipe weight (with insulation) (kg)
8	1/4"	13,5	0,52	0,6	1,2	1,42
10	3/8"	16	0,63	0,75	1,4	1,55
0		17,2	0,69	0,83	1,6	1,82
15	1/2"	21,3	0,89	1,09	1,8	2,5
20	3/4"	25	1,13	1,48	1,9	3,2
25	1"	33,7	1,77	2,25	2,1	4,3
32	1 1/4"	38	2,29	2,78	2,5	5,5
40	1 1/2"	48,3	2,95	4,41	2,8	6
50	2"	60,3	4,14	6,47	3	9
65	2 1/2"	76,1	5,28	9,16	3,6	13,5
80	3"	88,9	6,81	12,15	4	18,5
100	4"	108	9,33	17,31	4,2	26,5
100		114,3	9,9	18,9	4,2	30
125	5"	133	12,8	25,07	4,5	37
125		139,7	13,5	27,12	4,6	40
150	6"	159	17,1	34,76	5	49
150		168,3	18,1	38,02	5	51
200	8"	219,1	31,1	64,73	5,8	80
250	10"	267	40	95	5,9	106
		273	41,6	95,5	6,1	119
300	12"	323,9	44	121	6,5	152
350	15"	368	78,32	189,5	5,9	176
400	16"	406,4	86,4	205	7,1	218
500	18"	508	135	320,4	7,9	316,5

DRAIN PIPES (HARD PVC)

DN	Outer diameter (mm)	Pipe weight (kg/m)	Water filled pipe weight (kg/m)	Attachment distance (m)
40	50	0,24	1,28	0,5
50	63	0,31	2	0,6
70	75	0,49	3,93	0,8
100	110	1,03	8,01	1,2
125	125	1,35	12,43	1,5
150	160	2,16	18,03	1,7

DRAINAGE PIPES (CAST STEEL)

DN	Outer diameter (mm)	Pipe weight (kg/m)	Water filled pipe weight (kg/m)	Attachment distance - behind bond
50	58	4,3	6,4	every joint
70	78	5,9	9,9	every joint
100	110	8,4	17,7	every joint
125	135	11,8	24,5	every joint
150	160	14,1	32,3	every joint
200	210	23,1	54,6	every joint
250	274	34	88	every joint
300	326	44	121	every joint

info@solida.cz +420 465 531 059 www.solidacz.com

DRAIN PIPES (POLYETHYLENE)

DN	Outer diameter (mm)	Pipe weight (kg/m)	Water-filled pipe weight (kg/m)	Attachment distance (m)
25	32	0,27	0,8	0,3
32	40	0,35	1,26	0,4
40	50	0,44	1,96	0,5
50	56	0,5	2,46	0,6
57	63	0,57	3,12	0,7
70	75	0,68	4,42	0,8
80	90	0,95	6,36	1
100	110	1,43	9,5	1,3
115	125	1,82	12,27	1,5
125	140	2,29	15,39	1,8
150	160	3	20,11	2
200	200	3,83	31,46	2,25
250	250	6,02	49,15	2,85

COPPER PIPES (BARE)

DN	Outer diameter (mm)	Pipe weight (kg/m)	Water-filled pipe weight (kg/m)	Attachment distance (m)
	10	0,25	0,3	0,5
10	12	0,31	0,39	0,5
	15	0,39	0,52	0,6
	18	0,48	0,68	0,9
20	22	0,59	0,9	1,2
25	28	1,11	1,6	1,3
32	35	1,41	2,21	1,5
40	42	1,7	2,89	1,7
50	54	2,91	4,76	1,8
	64	3,47	6,3	1,9
70	70	3,8	7,22	2,1
	74	4,03	7,88	2,2
80	80	4,36	8,89	2,3
	104	5,7	13,55	2,5
	125	10,2	21,32	2,8
	131	10,7	22,97	3

THREADED PIPES DIN 2440 GALVANIZED

Inch, inch (palec)	Outer diameter (mm)	Pipe weight (kg/m)	Water-filled pipe weight (kg/m)	Attachment distance (m)
1/4"	13,5	0,68	0,74	1,2
3/8"	17,2	0,89	1,01	1,4
1/2"	21,3	1,27	1,47	1,5
3/4"	26,9	1,65	2,02	1,8
1"	33,7	2,55	3,13	2,1
1 1/4"	42,4	3,28	4,29	2,4
1 1/2"	48,3	3,77	5,14	2,6
2"	60,3	5,33	7,54	3
2 1/2"	76,1	6,8	10,52	3,2
3"	88,9	8,85	13,98	3,5
4"	114,3	12,6	21,3	4,3
5"	139,7	16,9	30,17	4,6
6"	165,1	20,1	39,06	5,4

FIXING RAILS LOAD

Single Point load

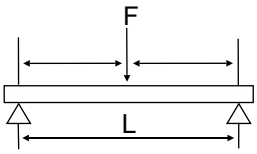

Distributed load - 2 points

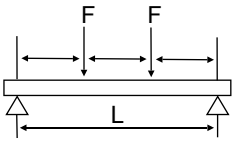

L (mm)	27/18 1,25 (kN)	28/30 1,75 (kN)	38/40 2,0 (kN)	40/60 2,5 (kN)
250	0,93	2,35	5,48	15,1
500	0,46	1,17	2,74	7,54
750	0,3	0,78	1,82	5,02
1000	0,19	0,58	1,36	3,76
1250	0,12	0,46	1,08	3
1500	0,08	0,38	0,9	2,49
1750	0,05	0,33	0,76	1,93
2000	0,04	0,25	0,66	1,46
2500	0,02	0,15	0,45	0,91
3000	0	0,1	0,3	0,61
3500	0	0,07	0,2	0,42
4000	0	0,05	0,14	0,3
4500	0	0,03	0,1	0,21
5000	0	0,02	0,06	0,14
5500	0	0,01	0,04	0,09
6000	0	0	0,01	0,05

L (mm)	27/18 1,25 (kN)	28/30 1,75 (kN)	38/40 2,0 (kN)	40/60 2,5 (kN)
250	0,69	1,75	4,1	11,28
500	0,34	0,88	2,05	5,66
750	0,2	0,58	1,36	3,76
1000	0,11	0,43	1,02	2,81
1250	0,07	0,35	0,81	2,24
1500	0,04	0,26	0,67	1,55
1750	0,03	0,19	0,56	1,13
2000	0,02	0,14	0,43	0,86
2500	0,01	0,09	0,26	0,53
3000	0	0,06	0,17	0,36
3500	0	0,04	0,12	0,25
4000	0	0,02	0,08	0,17
4500	0	0,02	0,05	0,12
5000	0	0,01	0,03	0,08
5500	0	0	0,02	0,05
6000	0	0	0,01	0,03

info@solida.cz +420 465 531 059 www.solidacz.com

FIXING RAILS LOAD

Distributed load - 3 points

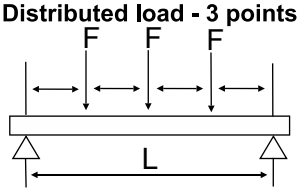

Uniformly distributed load

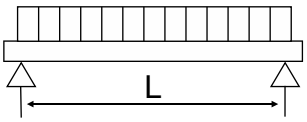

L (mm)	27/18 1,25 (kN)	28/30 1,75 (kN)	38/40 2,0 (kN)	40/60 2,5 (kN)
250	0,46	1,18	2,74	7,55
500	0,23	0,58	1,37	3,77
750	0,14	0,39	0,91	2,51
1000	0,08	0,29	0,68	1,88
1250	0,05	0,23	0,54	1,5
1500	0,03	0,19	0,45	1,11
1750	0,02	0,14	0,38	0,81
2000	0,01	0,1	0,3	0,61
2500	0	0,06	0,19	0,38
3000	0	0,04	0,12	0,25
3500	0	0,03	0,08	0,17
4000	0	0,02	0,06	0,12
4500	0	0,01	0,04	0,09
5000	0	0	0,02	0,06
5500	0	0	0,01	0,04
6000	0	0	0	0,02

L (mm)	27/18 1,25 (kN)	28/30 1,75 (kN)	38/40 2,0 (kN)	40/60 2,5 (kN)
250	1,86	4,7	10,97	30,2
500	0,93	2,35	5,48	15,09
750	0,56	1,56	3,64	10,04
1000	0,31	1,17	2,72	7,52
1250	0,19	0,93	2,17	6
1500	0,13	0,72	1,8	4,23
1750	0,09	0,53	1,53	3,08
2000	0,06	0,4	1,17	2,34
2500	0,03	0,25	0,73	1,46
3000	0,01	0,16	0,48	0,97
3500	0	0,11	0,33	0,68
4000	0	0,08	0,23	0,48
4500	0	0,05	0,15	0,34
5000	0	0,03	0,1	0,23
5500	0	0,02	0,06	0,15
6000	0	0	0,03	0,09

FIXING RAILS ST LOAD

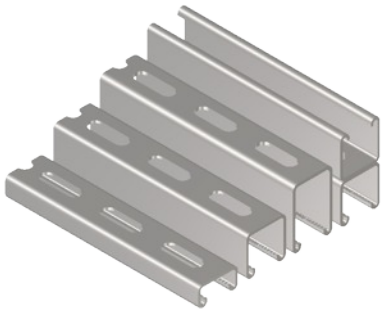

Single Point load

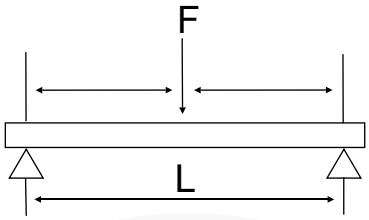

L (mm)	41/21 1,5 (kN)	41/21 2,5 (kN)	41/41 1,8 (kN)	41/41 2,5 (kN)	41/62 2,5 (kN)	41/41 D 2,5 (kN)	41/62 D 2,5 (kN)
250	1,82	2,42	5,69	8,12	15,21	22,81	43,97
500	0,9	1,21	2,84	4,05	7,59	11,4	21,97
750	0,6	0,8	1,89	2,7	5,06	7,59	14,63
1000	0,39	0,52	1,41	2,02	3,78	5,68	10,96
1250	0,24	0,33	1,12	1,61	3,02	4,53	8,75
1500	0,16	0,22	0,93	1,33	2,51	3,77	7,28
1750	0,11	0,15	0,76	0,99	2,14	3,22	6,22
2000	0,08	0,11	0,58	0,75	1,87	2,8	5,43
2500	0,04	0,06	0,35	0,46	1,37	2,22	4,32
3000	0,02	0,02	0,23	0,3	0,93	1,83	3,57
3500	0	0	0,15	0,2	0,66	1,42	3,03
4000	0	0	0,1	0,13	0,48	1,05	2,62
4500	0	0	0,06	0,09	0,35	0,79	2,3
5000	0	0	0,04	0,05	0,26	0,6	1,98
5500	0	0	0,01	0,02	0,18	0,46	1,58
6000	0	0	0	0	0,13	0,34	1,27

info@solida.cz +420 465 531 059 www.solidacz.com

FIXING RAILS ST LOAD

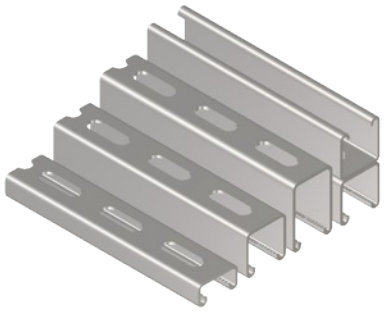

Distributed load - 2 points

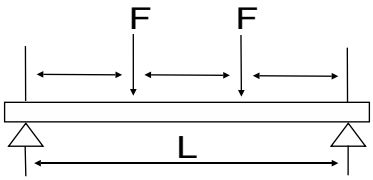

L (mm)	41/21 1,5 (kN)	41/21 2,5 (kN)	41/41 1,8 (kN)	41/41 2,5 (kN)	41/62 2,5 (kN)	41/41 D 2,5 (kN)	41/62 D 2,5 (kN)
250	1,36	1,81	4,2	6,07	11,36	17,04	29,85
500	0,68	0,9	2,13	3,04	5,7	8,55	16,48
750	0,41	0,55	1,41	2,02	3,79	5,69	10,97
1000	0,22	0,31	1,06	1,51	2,83	4,25	8,21
1250	0,14	0,19	0,84	1,16	2,26	3,4	6,57
1500	0,09	0,13	0,61	0,8	1,88	2,82	5,46
1750	0,06	0,09	0,45	0,58	1,6	2,41	4,67
2000	0,05	0,06	0,34	0,44	1,28	2,1	4,07
2500	0,02	0,03	0,21	0,27	0,8	1,66	3,24
3000	0,01	0,01	0,13	0,17	0,54	1,16	2,67
3500	0	0	0,09	0,12	0,38	0,83	2,27
4000	0	0	0,06	0,08	0,28	0,61	1,9
4500	0	0	0,04	0,05	0,2	0,46	1,47
5000	0	0	0,02	0,03	0,15	0,35	1,16
5500	0	0	0,01	0,01	0,11	0,27	0,92
6000	0	0	0	0	0,07	0,2	0,75

FIXING RAILS ST LOAD

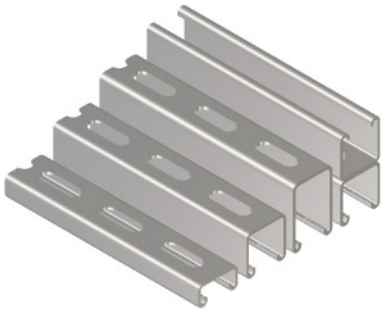

Distributed load - 3 points

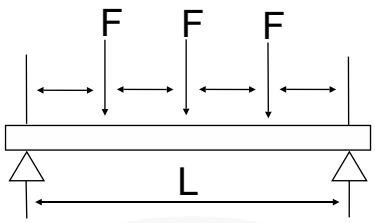

L (mm)	41/21 1,5 (kN)	41/21 2,5 (kN)	41/41 1,8 (kN)	41/41 2,5 (kN)	41/62 2,5 (kN)	41/41 D 2,5 (kN)	41/62 D 2,5 (kN)
250	0,91	1,21	2,8	4,07	7,63	11,45	19,95
500	0,45	0,6	1,42	2,02	3,79	5,7	10,98
750	0,29	0,4	0,94	1,35	2,53	3,8	7,32
1000	0,16	0,22	0,71	1,01	1,89	2,84	5,48
1250	0,1	0,14	0,56	0,8	1,51	2,27	4,38
1500	0,07	0,09	0,44	0,57	1,25	1,88	3,64
1750	0,04	0,06	0,32	0,41	1,07	1,61	3,11
2000	0,03	0,04	0,24	0,31	0,92	1,4	2,71
2500	0,01	0,02	0,15	0,19	0,58	1,11	2,16
3000	0	0,01	0,09	0,12	0,39	0,83	1,78
3500	0	0	0,06	0,08	0,27	0,59	1,51
4000	0	0	0,04	0,05	0,2	0,44	1,31
4500	0	0	0,02	0,03	0,14	0,33	1,05
5000	0	0	0,01	0,02	0,1	0,25	0,83
5500	0	0	0	0,01	0,07	0,19	0,66
6000	0	0	0	0	0,05	0,14	0,53

info@solida.cz +420 465 531 059 www.solidacz.com

FIXING RAILS ST LOAD

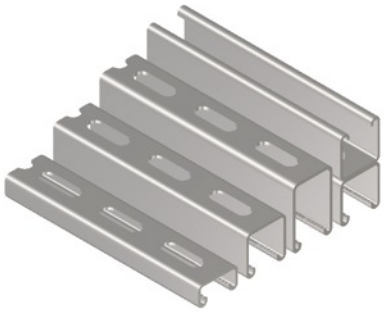

Uniformly distributed load

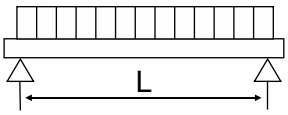

L (mm)	41/21 1,5 (kN)	41/21 2,5 (kN)	41/41 1,8 (kN)	41/41 2,5 (kN)	41/62 2,5 (kN)	41/41 D 2,5 (kN)	41/62 D 2,5 (kN)
250	3,69	4,85	11,38	16,25	30,42	45,63	59,95
500	1,81	2,42	5,68	8,11	15,2	22,81	43,94
750	1,12	1,52	3,79	5,4	10,12	15,18	29,27
1000	0,62	0,84	2,82	4,04	7,57	11,36	21,92
1250	0,39	0,53	2,25	3,16	6,04	9,07	17,51
1500	0,26	0,35	1,65	2,18	5,02	7,53	14,56
1750	0,18	0,25	1,22	1,58	4,29	6,44	12,45
2000	0,13	0,18	0,92	1,2	3,5	5,61	10,87
2500	0,07	0,09	0,57	0,74	2,2	4,45	8,64
3000	0,03	0,04	0,37	0,48	1,49	3,17	7,14
3500	0,01	0,01	0,25	0,32	1,05	2,27	6,06
4000	0	0	0,16	0,22	0,76	1,68	5,18
4500	0	0	0,11	0,14	0,56	1,27	4,01
5000	0	0	0,06	0,08	0,41	0,96	3,16
5500	0	0	0,03	0,04	0,3	0,73	2,53
6000	0	0	0	0	0,21	0,55	2,04

CANTILEVER ARMS LOAD

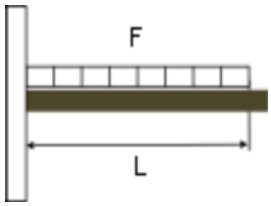

L (mm)	27/18 1,25 (N)	28/30 1,75 (N)	38/40 2,0 (N)
100	474	2 023	3 013
150	316	1 349	2 009
200	204	1 012	1 507
250	130	780	1 205
300	91	542	1 004
350	67	398	841
400	51	305	644
450	40	241	509
500	33	195	412
550	27	161	341
600	23	135	286
700	17	100	210
800	13	76	161
900	10	60	127
1 000	0	49	103
1 100	0	40	85
1 200	0	34	72
1 300	0	29	61
1 400	0	25	53
1 500	0	22	46

L (mm)	27/18 1,25 (N)	28/30 1,75 (N)	38/40 2,0 (N)
100	947	4 047	6 027
150	631	2 698	4018
200	474	2 023	3 013
250	348	1 619	2 411
300	242	1 349	2 009
350	177	1 061	1 722
400	136	813	1 507
450	107	642	1 339
500	87	520	1 099
550	72	430	909
600	60	361	763
700	44	265	561
800	34	203	429
900	27	161	339
1 000	22	130	275
1 100	18	107	227
1 200	15	90	191
1 300	13	77	163
1 400	11	66	140
1 500	0	58	122

CANTILEVER ARMS ST LOAD

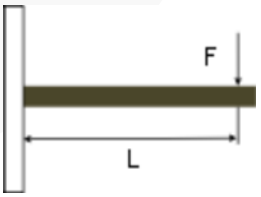

L (mm)	41/21 1,5 (N)	41/21 2,5 (N)	41/41 1,8 (N)	41/41 2,5 (N)	41/62 2,5 (N)	41/41 D 2,5 (N)	41/62 D 2,5 (N)
100	1 155	1 488	3816	4 757	9 206	14 253	20 429
150	770	992	2544	3 171	6 138	9 502	13 619
200	557	719	1908	2 378	4 603	7 126	10214
250	356	460	1526	1 903	3 683	5 701	8 172
300	247	320	1272	1 586	3 069	4 751	6 810
350	182	235	1090	1 359	2 630	4 072	5 837
400	139	180	889	1 114	2 302	3 563	5 107
450	110	142	702	881	2 046	3 167	4 540
500	89	115	569	713	1 841	2 851	4 086
550	74	95	470	589	1 674	2 591	3 714
600	62	80	395	495	1 427	2 375	3 405
700	45	59	290	364	1 048	2 036	2 918
800	35	45	222	279	803	1 638	2 554
900	27	36	176	220	634	1 295	2 270
1 000	22	29	142	178	514	1 049	2 043

info@solida.cz +420 465 531 059 www.solidacz.com

CANTILEVER ARMS ST LOAD

L (mm)	41/21 1,5 (N)	41/21 2,5 (N)	41/41 1,8 (N)	41/41 2,5 (N)	41/62 2,5 (N)	41/41 D 2,5 (N)	41/62 D 2,5 (N)
100	2 310	2 976	7631	9 514	18 413	28 506	40 858
150	1 540	1 984	5087	6 342	12 275	19 004	27 238
200	1 155	1 488	3816	4 757	9 206	14 253	20 429
250	924	1 190	3052	3 805	7 365	11 402	16 343
300	660	853	2544	3 171	6 138	9 502	13 619
350	485	626	2180	2 718	5 261	8 144	11 674
400	371	480	1908	2 378	4 603	7 126	10214
450	293	379	1696	2 114	4 092	6 335	9 079
500	238	307	1517	1 902	3 683	5 701	8 172
550	196	254	1254	1 572	3 348	5 183	7 429
600	165	213	1054	1 321	3 069	4 751	6 810
700	121	157	774	970	2 630	4 072	5 837
800	93	120	593	743	2 140	3 563	5 107
900	73	95	468	587	1 691	3 167	4 540
1 000	59	77	379	476	1 370	2 796	4 086

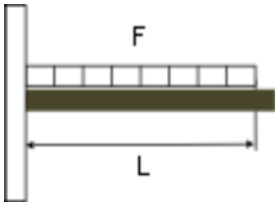

STUD BOLT, ROD AND PIPE LOAD

L (mm)	M8	M10	M12	M16	M20	M22	M24	1/2"	3/4"	1"
20	210	422	744	1.936	3.785	5.295	6.542	3.057	5.377	10.693
30	140	281	496	1.291	2.523	3.530	4.361	2.038	3.584	7.128
40	105	211	372	968	1.892	2.647	3.271	1.528	2.688	5.346
50	84	169	297	774	1.514	2.118	2.617	1.223	2.151	4.277
60	70	141	248	645	1.262	1.765	2.181	1.019	1.792	3.564
70	60	120	212	553	1.081	1.513	1.869	873	1.536	3.055
80	50	105	186	484	946	1.324	1.636	764	1.344	2.673
90	40	94	165	430	841	1.177	1.454	679	1.195	2.376
100	32	81	149	387	757	1.059	1.308	611	1.075	2.138
125	21	52	111	310	606	847	1.047	489	860	1.711
150	14	36	77	258	505	706	872	408	717	1.426
175	10	27	57	203	433	605	748	349	614	1.222
200	0	20	43	155	378	529	654	305	538	1.069
225	0	16	34	123	300	469	582	272	478	950
250	0	13	28	99	243	380	504	239	430	855
275	0	11	23	82	201	314	416	198	391	778
300	0	0	19	69	169	264	350	166	358	713
325	0	0	16	59	144	225	298	141	322	658
350	0	0	14	51	124	194	257	122	278	611
375	0	0	12	44	108	169	224	106	242	570
400	0	0	11	39	95	148	197	93	213	420
450	0	0	0	31	75	117	156	74	168	340
500	0	0	0	25	61	95	126	60	136	231

Threaded bolt / rod

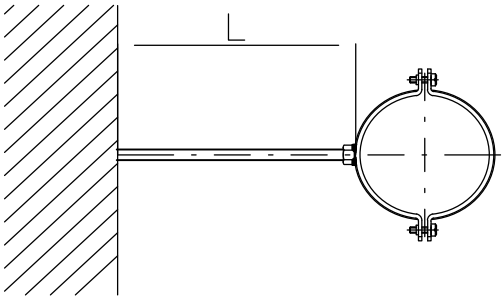

Threaded pipe

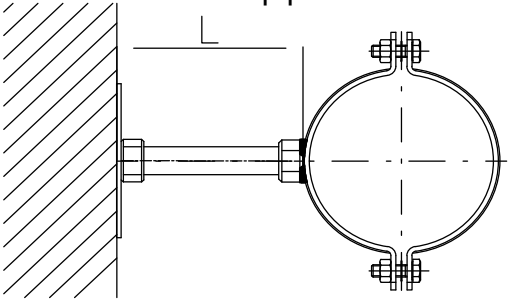

NOTES:

SOLIDA FASTENING SYSTEMS

SOLIDA

FASTENING SYSTEMS

SOLIDA, spol. s r.o.,
Semanínská 213, 560 02 Česká Třebová
tel.: +420 465 531 059
e-mail: info@solida.cz
www.solida.cz